uni-power

ENGINES • TRANSMISSIONS • PARTS

TEL: 01371 875331 www.uni-power.co.uk

HONDA

The Power of Dreams*

Accessories and Spare Parts

HONDA
POWER EQUIPMENT

* Make Your Dreams Come True

Innovation as driving force

Soichiro Honda once said: "We have only one future, and it will be made of our dreams, if we have the courage to challenge convention". Ever since the Honda Motor Corporation was founded in 1948, we have lived by this philosophy. Always challenging the status quo, always asking questions, always learning. Striving to make the impossible possible. Big dreams can move mountains. Today, Honda develops reliable and innovative products for a broad array of applications - from lawn mowers to corporate jets. With every product designed to make life more joyful for you and less impactful to the planet. Where will our dreams take us next?

HondaJet

Why can planes not be made cheaper, more energy-efficient and more environmentally friendly? At Honda we believe in stretching the boundaries of human mobility whether it is on the road, on the track or in the sky. In 1997, a revolution was born from a simple idea. Instead of installing the engine under the wing, as in standard aircraft, we decided to mount it over the wing. In 2000, HondaJet's progress was such that a new research facility was established exclusively for its development. Today HondaJet is operational. With its all-composite fuselage, it is lighter, quieter, more fuel-efficient, while at the same time emitting only 40% of the pollutants of comparable aircraft.

FCX Clarity

What if we could build a car with zero emissions? For more than two decades, our engineers have been looking for ways to challenge conventional thinking on how to make cars. Powered by an electric engine, the FCX Clarity produces no CO2 emissions. Since we unveiled our first fuel cell vehicle in 1999, we have brought the revolutionary FCX right from the lab to the fleet and now, to the public.

Motorcycles

No one is better placed than a biker to feel the sensations and to be able to define the needs for improvement with a view to enhancing user comfort. This is the approach we adopted to improve the emergency braking system (DCT system) of our motorcycles. This new technology is used not only in the Moto GP championship, where we accumulate the wins, but also in everyday life, offering users perfect road holding. What is more, all our innovations are applied in all models, from 50 cc to 1,800 cc such as the Gold Wing.

Miimo Robotic Lawn Mower

As the No. 1 in thermal mowers and being at the forefront of robotic technologies, it is only normal that we manufacture the mower of tomorrow. We have therefore launched our first robotic lawn mower, Miimo. Created and designed for both performance and discreetness, this new mower revolutionises the daily lives of gardeners. The result is a beautiful and healthy lawn, achieved without any stress or effort.
Based on perimeter wire technology, it operates automatically and when its battery is running low it returns to the home base for recharging. Fitted with various safety sensors, it is perfectly safe and does not pose any risks to persons. You can enjoy your garden while Miimo takes care of your lawn.

ASIMO

What if we could create products that can help with important tasks like assisting the elderly or a person confined to a wheelchair? Or perform tasks that are considered hazardous for humans, such as fighting fires? Back in 1986, our engineers made this dream a reality when they completed work on ASIMO, the world's most advanced humanoid robot. ASIMO reproduces human walking and running movements in an intelligent manner and is equally at ease on slopes and uneven surfaces. It is capable of turning, climbing stairs and grasping objects. ASIMO can even respond to simple commands and recognise faces in a small group of individuals. With its cameras, ASIMO is also able to create an accurate map of its environment to easily navigate around stationary and moving objects.

BLUE SKIES FOR OUR CHILDREN

Ever wished for a world in which our children can enjoy a free and sustainable future?

At Honda, this vision is nothing new for us. As pioneers of environmental technologies, our engineers have been exploring ways to make it happen for the past 40 years. Today, sustainability is still top of our agenda.
In June 2011, we pledged to cut CO2 emissions from all our products and corporate activities by 30% by the end of 2020 compared to 2000 levels. We are also firmly committed to powering our vehicles with innovative renewable technologies wherever we can.

The genuine Honda part

Honda recommends the exclusive use of Honda Original Spare Parts and Accessories.

Meeting very strict requirements, they **guarantee Honda quality** for you and **maximum comfort and safety** in use for our customers.

Our commitment is to offer and supply you with a complete range of **top quality** spare parts, accessories, lubricants and **reliable** maintenance solutions **to ensure the longevity of our products.**
It is our role - and yours as a representative of the brand - to recommend the use of Honda original parts.

Honda Motor Corporation will not be able to ensure the Honda quality and guarantee if you fit other spare parts onto Honda products.

Honda Operations

Tools at Your Disposal

Use Global Infotech 2 to find, in record time, references, exploded views, photographs and applications of our spare parts and accessories, and directly place your spare parts order.

Available on the Internet via your Honda Extranet.

https://www.ecom.honda-eu.com

GIT2
- Web Documents
- User Manuals
- Web PIT
- Web Bulletins
- Web EPC
- Web QRG

Doc — Find all Honda technical documents, workshop manuals, installation manuals, technical documentation updates and corrections

User manuals — Find user manuals in PDF format to print them out for your customers

PIT — Tool to identify certain categories of parts by their dimensions and visuals if you do not have the product serial number (belt, blade, etc.)

Web Bulletins — All technical data sheets distributed by Honda for its equipment product range

EPC — The spare parts search catalogue for all products and all categories of parts

QRG — Catalogue to rapidly locate fast-moving parts by model

Honda Dream Factory E-learning:

Our portal features an '**E-learning**' tab dedicated to online/on-site training, to help you with any recurrent questions you or your customers may have, to increase your efficiency in obtaining information as quickly as possible, and also to allow you to work independently.

Before, during and after training!

Interactive training:

Product visuals with 360° view:

Honda training:

To familiarise yourself with the various tools designed for the after-sales service activity and increase your efficiency, register for the after-sales service training via the **Training** tab on our portal.. ».

Also view our training programme via

https://www.ecom.honda-eu.com

Honda Original

Connect your PC with Dr H to compatible Honda products to obtain a complete diagnostic of your machine.

Dr H enables you to boost the productivity of your workshop, the quality of your service and to easily capture the usage history of the product (reference: 06398-YH0-010).

Dr H is also available in a waterproof version: 06395-YH0-010.

Store your fuel properly

To back up our recommendations, Honda provides you with tools to protect your fuel:

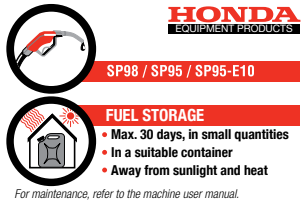

Educate your customers on the proper use of fuel using the dedicated sticker to be affixed to the product with the recommended precautions.

Stickers for fuel storage	
Reference	Packaging
01900-STI-4X6	Pack of 50

Rapidon 6 fuel can	
Reference	Packaging
01296-RAP-505	Pack of 5
01296-RAP-DIS	Pack of 15 + display box

❶

❷

PRO Honda fuel stabiliser and carburettor cleaner		
Description	Reference	Packaging
Fuel Stabiliser	❶ 08CXZ-FSC-250	12 bottles of 240 ml
Carburettor Cleaner	❷ 08CAD-CCL-400	12 aerosols of 400 ml

(Subject to stock availability)

HONDA
The Power of Dreams

The following tips apply to all HONDA PRODUCTS and Honda motorised products.
For more information, CONSULT a true professional:
your AUTHORISED HONDA DEALER.

PROPER FUEL USE

... < 1989 < **1990** > 2000 > ...

Your machine uses **premium** or **regular fuel:** use **SP98** or **SP95** with **a lead substitute additive.**

Your machine uses **unleaded fuel**: use **SP98** or **SP95** or **SP95-E10.**

Improve the quality and storage life of your fuel by adding a petrol stabilizer, Honda PRO fuel stabilizer

PROPER FUEL STORAGE

- **Store for a short period (max. 1 month).**
- **Store in small quantities (max. 1 can).**
- **Use a leakproof container suitable for hydrocarbons.**
- **Store in a cool, ventilated place away from sunlight.**
- **Use a stabiliser to extend storage life.**

PROPER STARTING OF YOUR MACHINE

- **During use, consume fuel stored for less than 1 month or fuel treated with Honda PRO fuel stabilizer.**
- **Before winter, drain the carburettor bowl, the fuel tank and follow the maintenance/storage tips given in the user manual.**
- **Make an appointment with your authorised Honda dealer for winter maintenance.**

HONDA recommends

HONDA
POWER EQUIPMENT

Contents

Multipacks and Parts in Blister Packs 9

New Robotic mowers, Honda Miimo 12

Ride-on mowers and weedmowers 14

- Pedestrian mowers
- Electric Mowers and Brushcutters

Ride-on mowers 26

Brushcutters and other handheld equipment 33

- Nylon Wires • Personal Equipment • Brushcutters
- Multifunction tools • Hedgetrimmers • Sprayers

Tillers 43

- Tiller Accessories • Rotating tines • Rear Tine Tillers
- Ploughing equipment • Ridgers and Potato Lifters
- Snow equipment

Generator sets 63

- Electric Accessories • Protective Covers • Transport Kits• Remote Control Units
- Automatic Starting Devices

Snow blowers 70

Power Carriers and Pumps 73

Engines 76

- Engine models • Fuel Supply Systems • Gaskets
- Spark Plugs and Starter Assemblies • Air Filters • Oil and Petrol Filters

Maintenance 84

Tooling 85

Multipacks

New

Anti-wear grease	
Single cartridge	Pack of 12
06899-VF9-010HE	06899-VF9-010HEMP

MULTIPACK

Enjoy lower net prices all year round by ordering your parts in multipacks!

Air filter multipacks					
Single filter	Pack of 8	Pack of 80	Pack of 250	Pack of 480	Pack of 500
17210-ZE0-505	06510-ZE0-105	06210-ZE0-805	06210-ZE0-305		
17210-ZE1-505	06510-ZE1-105	06210-ZE1-805			06210-ZE1-305
17210-ZE2-515	06510-ZE2-105	06210-ZE2-805	06210-ZE2-305		
17210-ZE3-505	06510-ZE3-105	06210-ZE3-805			06210-ZE3-305
17210-ZE6-505	06510-ZE6-105				
17210-ZE7-505	06510-ZE7-105				
17211-ZE7-W03	06510-ZE7-W05				
17211-ZF5-V01	06510-ZF5-V05				
17211-ZG9-800	06510-ZG9-105				
17211-ZG9-M00	06510-ZG9-M05				
17211-ZL8-023	06510-ZL8-105	06210-ZL8-805		06210-ZL8-905	
17211-Z1L-003	06510-Z1L-105	06210-Z1L-805			

(Subject to stock availability)

Starter assembly multipacks		
Single starter assy	Pack of 10	Colour
28400-Z0T-003ZA	08400-ZH8-305	Black
28400-ZH8-013YA	08400-ZH8-505	
28400-Z0T-003ZB	08400-ZH8-405	
28400-ZM3-003ZA	08400-ZM3-505	Black
28400-Z0H-003	08400-Z0H-505	
28400-ZM0-023ZA	08400-ZM0-505	Black
28400-ZL8-023ZA	08400-ZL8-505	Black
28400-Z0M-801	08400-Z0M-505	
28400-ZL8-023ZC	08400-ZL8-405	Red
28400-ZM7-003	08400-ZM7-505	
28400-ZE2-W02ZN	08400-ZE2-505	Red
28400-Z0D-V04ZA	08400-Z0D-505	Black
28400-ZM0-633ZD	08400-ZM0-405	Red
28400-ZM0-633ZA	08400-ZM0-305	Black
28400-ZE3-W02ZP	08400-ZE3-505	Red
28400-ZM0-J22ZB	08400-ZM0-205	Red
28400-ZG9-803	08400-ZG9-505	

(Subject to stock availability)

New

❶

❷

Maintenance Kit Multipacks	
Single kit	Pack of 12
❶ 06211-VH3-505	06211-VH3-505MP
❷ 06211-ZL8-000	06211-ZL8-000MP

(Subject to stock availability)

Blade multipacks	
Blade, 1 unit	Pack of 10
72511-VA2-505	72511-VA2-505MP
72511-VA9-H50	72511-VA9-H50MP
72511-VB3-E41	72511-VB3-E41MP
72511-VE0-N00	72511-VE0-N00MP
72511-VE1-652	72511-VE1-652MP
72511-VE1-E50	72511-VE1-E50MP
72511-VG0-C50	72511-VG0-C50MP
72511-VG8-A50	72511-VG8-A50MP
72511-VH3-000	72511-VH3-000MP
72511-VH4-000	72511-VH4-000MP
72511-VK7-000	72511-VK7-000MP
72511-VK8-000	72511-VK8-000MP
72511-VH7-000	72511-VH7-000MP
72531-VH7-000	72531-VH7-000MP
72511-VF0-K60	72511-VF0-K60MP
72511-VK8-J50	72511-VK8-J50MP
72511-VG4-K00	72511-VG4-K00MP

Starter cord coils - 61 m		
Reference	Cord diameter	Engine
08535-ZG921-11	2.78 mm	GX22/25/31/35
08540-ZG921-11	3.18 mm	GXH50/GXV50
08545-ZG921-11	3.57 mm	GC/GCV/GX100
08550-ZG921-11	3.97 mm	GX100 rammers
08555-ZG921-11	4.37 mm	GX120/160/200/240/270/340/390
08560-ZG921-11	4.76 mm	GX120/160/200/240/270/340/390
08570-ZG921-11	5.56 mm	GX610/620/670

(Subject to stock availability)

Oil filter multipacks	
Single filter	Pack of 10
15400-ZJ1-004	05400-ZJ1-505

(Subject to stock availability)

Parts in blister pack

Optimise your selling space!

Parts in blister pack			
Your Honda machine	Honda engine type	4-Stroke Maintenance Kit	Air filter
Pedestrian mowers			
IZY41, IZY46	GCV	❶ 06211-VH3-505	17211-ZL8-023
IZY53	GCV	❷ 06211-ZL8-000	17211-ZL8-023
HRX426C, HRX476C	GCV	❷ 06211-ZL8-000	17211-ZL8-023
HRX537 (except HZE type)	GCV	❷ 06211-ZL8-000	17211-ZL8-023
HRX537 HZE	GCV	❷ 06211-ZL8-000	17211-ZL8-023
HRD536C	GCV	❷ 06211-ZL8-000	17211-ZL8-023
HRS536C	GCV	❷ 06211-ZL8-000	17211-ZL8-023
UM516C	GCV	❷ 06211-ZL8-000	17211-ZL8-023
Generator sets			
EC2000	GX160	❷ 06211-ZE1-000	
ECM2800	GX200	❷ 06211-ZE1-000	
EC3600	GX270	❷ 06211-ZE3-000	
EC5000	GX390	❷ 06211-ZE3-000	
Water Pumps			
WT20XK1/K2/K3	GX160	❷ 06211-ZE1-000	
WT30XK1/K2/K3	GX240	❷ 06211-ZE2-000	
WMP20X	GX160	❷ 06211-ZE1-000	
Tillers			
FG201	GXV50		17211-ZL8-023
and Cultivators			
F220	GXV57		17211-ZL8-023
FG315	GC160	❷ 06211-ZL8-000	17211-ZL8-023
F501	GX160	❷ 06211-ZE1-000	
F506	GX160	❷ 06211-ZE1-000	
FF300	GXV57		17211-ZL8-023
FF500	GCV160	❷ 06211-ZL8-000	17211-ZL8-023
F560	GX160	❷ 06211-ZE1-000	
F720	GX200	❷ 06211-ZE1-000	
F810	GX240	❷ 06211-ZE2-000	
FR750	GX200	❷ 06211-ZE1-000	

(Subject to stock availability)

Parts in blister pack							
Your Honda machine	Manual nylon head	Tap-and-go nylon line head	3-tooth blade 230 mm	3-tooth blade 250 mm	4-tooth blade 230 mm	4-tooth blade, 255 mm	80-tooth blade, 255 mm
Brushcutters							
UMK422/K1	72560-VF9-C12						
UMK422/K1, UMK431/LT4E		72560-VF9-C41EX					
UMK425E UMK431E, UMK435E LE/L3E			72511-VF9-A02				
UMK422/K1				72511-VJ5-000HE			
UMK422LT4E/UT4E, UMK422/K1 UMK431LT4E/UT4,UMK431K1 UMR425E, UMR431LT4					72511-VF9-E32		
UMK422LT4E/UT4E/K1 UMK431LT4E/UT4/K1 UMR425E, UMR431LT4						72511-VF9-F32	
UMK435E, UMK422UT4E							80018-VK5-003

(Subject to stock availability)

Our complete nylon wire range
is available in blister pack,
see page 35!

Parts in blister pack

Notes

Robotic mowers, Honda Miimo

New

Accessories and Spare Parts

	Accessories	
	HRM 300 and HRM 500	
	Reference	Packaging
Base station	❶ 31200-VP7-000	Without power supply kit
Base station power supply kit	❷ 31780-VP7-003	Transformer + cable
Base station transformer	❸ 31786-VP7-003	
Power cable	31782-VP7-003	

	HRM 300 and HRM 500	
	Reference	Packaging
Peripheral wire 200 m	31575-VP7-750	200 m
Peripheral wire 300 m	31575-VP7-000	300 m
Pegs	31225-VP7-000	Bag of 50 pegs
Base station wire connector	31579-VP7-000	Unit

(Subject to stock availability)

	HRM 300	HRM 500
	Reference	Reference
Battery	31520-VP7-750	31520-VP7-000

(Subject to stock availability)

	Chassis parts	
	HRM 300 and HRM 500	
	Reference	Packaging
Pack of blades	06511-VP7-310HE	3 blades, 3 bolts
Blade	72511-VP7-305	Unit
Blade bolt	90103-VP7-010	Unit
Blade holder disc	72612-VP7-000	Unit
Front wheel	44713-VP7-000	Unit
Front wheel cover	44719-VP7-000	Unit
Rear wheel	42710-VP7-000	Unit
Plastic cover top	63302-VP7-000	Unit

(Subject to stock availability)

Notes

Pedestrian mowers

Accessories

Rapidon 6

This 6l fuel can eliminates the need for a funnel

Rapidon 6 fuel can	
Reference	Packaging
01296-RAP-505	Pack of 5
01296-RAP-DIS	Pack of 15 + display box

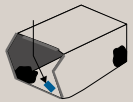

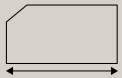

Quick grass bag identification			
Model	Colour of grass bag tape	Dimensions	Reference
HRD535, HRD536K0/K1/K2	Green	490 mm	81320-VF1-023
HRD536K2/K3/K4, HRD536/C2/C3	Green	490 mm	81320-VF1-D51
HRH536/K1/K2/K3/K4	Yellow	560 mm	81320-VG0-013
HRB425C	White	427 mm	81320-VG8-003
HRB425C1	White	427 mm	81320-VG8-A51
HRB425C1, HRB475C, HRB476C	Red	543 mm	81320-VE0-B52
HRG465C1/C2/C3	Grey	451 mm	81320-VH3-013
HRG465C1/C2/C3	Pink	451 mm	81320-VH4-013
HRG536C4	No type - white cloth bag	440 mm	81320-VG4-A51
HRG536C6	White	425 mm	81320-VG4-P50
HRX426C	White	427 mm	81320-VG8-A51
HRX476C	Red	543 mm	81320-VK8-003
HRX537C/C1/C2	Violet	580 mm	81320-VE1-E51

(Subject to stock availability)

Mower deck scraper

The GOKO 350 deck cleaner/scraper is the ideal accessory for cleaning lawn mowers.

Deck cleaner/scraper for lawn mowers GOKO350	
Reference	Packaging
GOKO350X5	Pack of 5
GOKO350X10	Pack of 10
GOKO350X15	Pack of 15

(Subject to stock availability)

Pedestrian mowers

Maintenance

Engine maintenance GC/GCV/GS/GSV		
Description	Reference	Kit contents
4-stroke engine maintenance kit for GC/GCV135/160/190/ GS/GSV160/190	06211-ZL8-000	08221-888-061HE : 0.6 l oil 10W30 98079-56846 : Spark plug BPR6ES 17210-ZL8-023: Air filter
	06211-ZL8-000MP	Pack of 12 kits

(Subject to stock availability)

Mower maintenance				
Description	Reference	Packaging	Multipack Reference	Packaging
4 stroke oil 10W30 - SJ SH	❶ 08221-888-101HE	1l bottle	08221-888-101MP	24 1l bottles
	❷ 08221-888-061HE	0.6l can	08221-888-061MP	24 0.6l cans
Hydrostatic oil (HST)	❸ 08208-999-02HE	1l bottle		

(Subject to stock availability)

PRO Honda fuel stabiliser and carburettor cleaner		
Description	Reference	Packaging
Fuel stabiliser	❶ 08CXZ-FSC-250	12 bottles of 240 ml
Carburettor Cleaner	❷ 08CAD-CCL-400	12 aerosols of 400 ml

(Subject to stock availability)

Multipack available: see p. 10

Pedestrian mowers

Mulching

Mulching

For good mulching, mowing must be done on short grass, at regular intervals, to reduce the height of the grass being cut. Under the action of the twin blades and the cutter housing, the grass is recycled inside the cutter housing and reduced to finely chopped strands, spread evenly over the lawn.

Mulching has several advantages

Save time You no longer need to remove the cut grass: there is no more need to empty the mower bag, which amounts to half the time spent mowing.

A healthy lawn mulch provides natural nutrients to the lawn as it breaks up and prevents it from drying out during the summer.

No grass clippings: it saves walks to the compost heap. You no longer need to go your local waste disposal site.

This sign tells you to be careful during certain operations, notably concerning the blade tightening torque. Please refer to the safety instructions in the machine's user manual.

MULTIPACK Multipack available: see p. 10

Mulching kit with blade holder and bolt
Ref. : 06762-VH4-K12 & 06762-VH3-K12

Mulching kit with blade bolt
Ref. : 06762-VH4-N20 & 06762-VH3-N20

	Mulching kit		Upper blade		Lower blade		Ejection cover
	Reference	Type / Serial No.	Reference	Info	Reference	Info	Reference
HRB425C/C1	06762-VG8-000		72531-VG8-M00		72511-VG8-M00		76266-VG8-M00
HRB475K1/K2/K3	06762-VE0-M00		72531-VE0-M00		72511-VE0-M00		76266-VE0-M00
HRB475C	06762-VE0-M00		72531-VE0-M00		72511-VE0-M00		76266-VE0-M00
HRB476C/C1	06762-VE0-M00		72531-VE0-M00		72511-VE0-M00		76266-VE0-M00
HRB535	06764-VE2-810		72531-VE2-020		72511-VG4-K00		76266-VE2-000ZA
HRB536	06764-VE2-810		72531-VE2-020		72511-VG4-K00		76266-VE2-000ZA
HRD535/K2	06762-VG0-B51 detail 06762-VF1-C50	QME / QXE TME / SME ~8106640 TME / SME 8106641~	72531-VE2-020 72531-VF0-H51 72531-VE2-020		72511-VG4-K00 72511-VF0-H51 72511-VG4-K00		76266-VG0-B50 76266-VF0-E50 76266-VF0-E50
HRD536	detail 06762-VF1-C50	TME / SME ~8107480 TME / SME 8107481~	72531-VF0-H51 72531-VE2-020		72511-VF0-H51 72511-VG4-K00		76266-VF0-E50 76266-VF0-E50
HRD536C/C1	detail 06762-VF1-C50	TME / SME ~8132521 TME / SME 8132522~	72531-VF0-H51 72531-VE2-020		72511-VF0-H51 72511-VG4-K00		76266-VF0-E50 76266-VF0-E50
HRD536C2/C3	06762-VF1-C50	TME / SME 1000001~	72531-VE2-020		72511-VG4-K00		76266-VF0-E50
HRG415C1/C2	06762-VH3-K13	Includes: Blade holder: 72611-VH3-L10 Flange bolts: 90105-VH3-L10	72531-VH3-L10		72511-VH3-000 MULTIPACK	Original blade	76266-VH3-L10
HRG415C3	06762-VH3-N20	Includes: Flange bolts: 90105-VH3-L10	72531-VH3-L10		72511-VH3-N10	Original blade	76266-VH3-L10
HRG465C1/C2	06762-VH4-K13	Includes: Blade holder: 72611-VH3-L10 Flange bolts: 90105-VH3-L10	72531-VH4-L10		72511-VH4-000 MULTIPACK	Original blade	76266-VH4-L10
HRG465C3	06762-VH4-N20	Includes: Blade bolts: 90105-VH3-L10	72531-VH4-L10		72511-VH4-N10	Original blade	76266-VH4-L10
HRG536C/C1/C2/C3	06762-VG4-000HE		72531-VE2-020		72511-VG4-K00		76266-VG4-020ZA
HRG536C4/C5/C6	Detail: (upper + lower) mulching blades + cover + bolt + washer	Bolt 90105-960-710 x2 Wshr 90502-VG3-000 x2	72531-VE2-020		72511-VG4-K00		76266-VG4-010ZA
HRH536K3/K4	06763-VG0-B50HE 06762-VG0-B51	8200001 ~ 8333294 8333295 ~	72531-VE2-020		72511-VG4-K00	Original blade	76266-VG0-B50
HRM535	06764-VE2-810		72531-VE2-020		72511-VG4-K00		76266-VE2-000ZA
HRM536C	06764-VE2-810		72531-VE2-020		72511-VG4-K00 MULTIPACK		76266-VE2-000ZA
HRX426C	06762-VK7-000		72531-VK7-000		72511-VK7-000	Original blade	76266-VG8-M00
HRX476C	06762-VK8-000		72531-VK8-000		72511-VK8-000	Original blade	76266-VK8-000
HRX537C		Original blade	72531-VH7-000	Original blade	72511-VH7-000	Original blade	
HRX537C1		Original blade	72531-VH7-000	Original blade	72511-VH7-000	Original blade	
HRX537C2		Original blade	72531-VH7-000	Original blade	72511-VH7-000	Original blade	

(Subject to stock availability)

Pedestrian mowers

Engine parts

Think about displaying the air filter in blister pack on your shelves for your customers to buy

Ref. : 17211-ZL8-023

	NGK spark plug		Nippon Denso spark plug			Air filter			Belt		Starter assy, complete	
	Reference	Info	Reference	Info	Type	Reference	Version	Pack.	Reference	Version/Type/ Serial No.	Reference	Version/Type/ Serial No.
HRB423/K1	98073-54744 98073-54776	BRM-4A BPMR-4A	98073-54754	W14MR-U	K0 K1	17211-ZG1-700 17211-ZL1-000	K0 K1		23161-VA9-E51		28400-ZL1-003	K1
HRB425C/C1	98079-56846 X10	BPR6ES				17211-ZL8-023 MULTIPACK		Blister	23161-VG8-850 23161-VG8-800	~8079200 8079201~	28400-ZM0-J22ZB MULTIPACK	
HRB475K0	98079-55846 X10	BPR5ES	98079-55855	W16EPR-U		17211-ZG9-M00 MULTIPACK			22431-VE0-800		28400-ZG9-803 MULTIPACK	
HRB475K1/K2/K3	98079-55846 X10	BPR5ES	98079-55855	W16EPR-U		17211-ZG9-M00 MULTIPACK			23161-VG8-800 22431-VE0-L02	H S	28400-ZG9-803 MULTIPACK	
HRB475C	98079-56846 X10	BPR6ES				17211-ZL8-023 MULTIPACK		Blister	22431-VE0-L02		28400-ZM0-J22ZB MULTIPACK	
HRB476C/C1	98079-56846 X10	BPR6ES	98079-55855	W16EPR-U		17211-ZL8-023 MULTIPACK		Blister	23161-VE0-M11 22431-VE0-800 22431-VE0-L02	Q HXE SDE, SXE	28400-ZM0-J22ZB MULTIPACK	
HRB535K0/K1	98079-55846 X10	BPR5ES				17211-ZG9-M00 MULTIPACK			22431-VE2-801		28400-ZG9-803 MULTIPACK	
HRB535K2/K3	98079-55846 X10	BPR5ES				17211-ZG9-M00 MULTIPACK			22431-VE2-801 22431-VE2-J00	S H	28400-ZG9-803 MULTIPACK 28400-ZG9-M23	~7212742 7212743~
HRB536C	98079-56846 X10	BPR6ES				17211-ZL8-023 MULTIPACK		Blister	22431-VE2-J00 22431-VE2-801 22431-VE1-T00	HXE SXE TXE	28400-ZM0-J22ZB MULTIPACK	
HRB536C1	98079-56846 X10	BPR6ES				17211-ZL8-023 MULTIPACK		Blister	22431-VE2-J00 22431-VE1-T00	HXE TXE	28400-ZM0-J22ZB MULTIPACK	
HRB536C2	98079-56846 X10	BPR6ES				17211-ZL8-023 MULTIPACK		Blister	22431-VE2-J00 22431-VE1-T00	HXE TXE	28400-ZM0-J22ZB MULTIPACK	
HRD535K0	98079-56846 X10	BPR6ES				17211-ZG9-M00 MULTIPACK			22431-VE2-J00 22431-VE2-801	HME, HXE SME, SXE	28400-ZG9-803 MULTIPACK	
HRD535K1	98079-55846 X10	BPR5ES				17211-ZG9-M00 MULTIPACK			22431-VE2-801 22431-VF0-E51	SME, SXE TME	28400-ZG9-803 MULTIPACK	
HRD535K2	98079-55846 X10	BPR5ES				17211-ZG9-M00 MULTIPACK					28400-ZG9-803 MULTIPACK	
HRD536K0	98079-55846 X10	BPR5ES	98079-55855	W16EPR-U		17211-ZE7-W03 MULTIPACK			22431-VE2-J00 22431-VE2-801	H SME, SXE	28400-ZG9-803 MULTIPACK	
HRD536K1	98079-55846 X10	BPR5ES	98079-55855	W16EPR-U		17211-ZE7-W03 MULTIPACK			22431-VE2-J00		28400-ZG9-803 MULTIPACK	
HRD536K2	98079-55846 X10	BPR5ES	98079-55855	W16EPR-U		17211-ZE7-W03 MULTIPACK			22431-VE2-J00	H	28400-ZG9-803 MULTIPACK	
HRD536K3	98079-55846 X10	BPR5ES	98079-55855	W16EPR-U		17210-Z1V-003			22431-VE2-J00	H	28400-Z1V-J52ZA	
HRD536K4	98079-55846 X10	BRPR5ES	98079-55855	W16EPR-U		17210-Z1V-003			22431-VE2-J00		28400-Z1V-J52ZA	
HRD536C	98079-55846 X10	BPR5ES				17211-ZL8-023 MULTIPACK		In blister	22431-VE2-J00 22431-VE2-801	HXE SXE	28400-ZM0-J22ZB MULTIPACK	
HRD536CK1	98079-56846 X10	BPR6ES				17211-ZL8-023 MULTIPACK		In blister	22431-VE2-J00 22431-VE2-801 22431-VF0-E51	HXE SXE TXE	28400-ZM0-J22ZB MULTIPACK	

(Subject to stock availability)

X10 Note: this reference is packaged in units of 10.

MULTIPACK Multipack available: see p. 10

	NGK spark plug		Nippon Denso spark plug			Air filter			Belt		Starter assy, complete	
	Reference	Info	Reference	Info	Serial No.	Reference	Version	Pack.	Reference	Version/Type/ Serial No.	Reference	Version/Type/ Serial No.
HRD536C2	98079-56846	BPR6ES				17211-ZL8-023		Blister	22431-VE2-J00 22431-VF0-E51	HXE TXE	28400-ZM0-J22ZB	
HRD536C3	98079-56846	BPR6ES				17211-ZL8-023		Blister	22431-VE2-J00 22431-VF0-E51	HXE TXE	28400-ZM0-J22ZB	
HRF464	98079-55846	BPR5ES	98079-55855	W16EPR-U		17210-ZE6-505			CG35064100H0			
HRF465	98079-55846	BPR5ES				17211-ZG9-M00			CG35064100H0			
HRG413	98073-54744	BMR-4A				17211-ZG1-700 17211-ZL1-000	K0 K1		CG35063710H0			
HRG415C	98079-56846	BPR6ES				17211-ZL8-023		Blister	CG35063710H0		28400-ZM0-633ZD	
HRG415C1/C2 (IZY)	98079-56846	BPR6ES				17211-ZL8-023		Blister	22431-VE0-L02		28400-ZM0-J22ZB	
HRG415C3 (IZY)	98079-54846	BPR4ES				17211-ZL8-023		Blister	22431-VE0-L02		28400-ZM0-J22ZB	
HRG465C	98079-55846	BPR5ES				17211-ZL8-023		Blister	CG35063710H0		28400-ZM0-J22ZB	
HRG465C1/C2 (IZY)	98079-56846	BPR6ES				17211-ZL8-023		Blister	22431-VE0-L02		28400-ZM0-J22ZB	
HRG465C3 (IZY)	98079-54846	BPR4ES				17211-ZL8-023		Blister	22431-VE0-L02		28400-ZM0-J22ZB	
HRG536C	98079-56846	BPR6ES				17211-ZL8-023		Blister	22431-VG4-B50		28400-ZM0-633ZD	
HRG536C1/C2/C3 (IZY)	98079-56846	BPR6ES				17211-ZL8-023		Blister	22431-VG4-B50		28400-ZM0-633ZD 28400-ZM0-J22ZB	C1 C2/C3
HRG536C4	98079-56846	BPR6ES				17211-ZL8-023		Blister	22431-VG4-B50		28400-ZM0-J22ZB	
HRG536/C5 (IZY)	98079-55846	BPR5ES				17211-ZL8-023		Blister	22431-VG4-B50		28400-ZM0-J22ZB 28400-ZM0-633ZD	C4 C5
HRG536C6	98079-55846	BPR5ES				17211-ZL8-023		Blister	22431-VG4-B50		28400-ZM0-633ZD	
HRH536K0/K1/K2	98079-55846	BPR5ES	98079-55855	W16EPR-U		17211-ZE7-W03					28400-ZG9-803	
HRH536K3/K4	98079-55846	BPR5ES	98079-55855	W16EPR-U		17210-Z1V-003					28400-Z1V-J52ZA	
HRM535/K1	98079-55846	BPR5ES				17211-ZG9-M00			22431-VE2-801		28400-ZG9-803	
HRM535K2/K3	98079-55846	BPR5ES				17211-ZG9-M00			22431-VE2-801		28400-ZG9-803 28400-ZG9-M23	~7212742 7212743~
HRM536C/C1	98079-56846	BPR6ES				17211-ZL8-023		Blister	22431-VE2-801 22431-VE1-T00	C C1	28400-ZM0-J22ZB	
HRS536C/C1/C2/C3	98079-56846	BPR6ES				17211-ZL8-023		Blister	22431-VG3-B50 22431-VG3-D50	C C1/C2/C3	28400-ZM0-633ZD	
HRX426C	98079-56846 98079-55846	BPR6ES			~2218977 2218978~	17211-ZL8-023		Blister	23161-VG8-800 23161-VK7-750	~1058560 1058561~	28400-ZM0-633ZD	
HRX476C	98079-56846 98079-55846	BPR6ES BPR5ES			~2218977 2218978~	17211-ZL8-023		Blister	22431-VE0-L02 22431-VK8-750	Type H Type S	28400-ZM0-633ZD	
HRX476C1	98079-55846	BPR5ES				17211-ZL8-023		Blister	22431-VK8-J50 22431-VF0-E51	H V	28400-ZM0-J22ZB	
HRX537C	98079-56846	BPR6ES				17211-ZL8-023		Blister	22431-VH7-000		28400-Z0Y-802ZB 28400-Z0Y-013ZA	HME HXE/TDE
HRX537C1	98079-56846	BPR6ES				17211-ZL8-023		Blister	22431-VH7-000 22432-VH7-A00 22431-VH7-K00	TDE HME/HXE VYE	28400-Z0Y-802ZB 28400-Z0Y-013ZA	HMEA HXEA/TDEA/VYEA
HRX537C2	98079-55846	BPR5ES				17211-ZL8-023		Blister	22431-VH7-K00 22432-VH7-A00	VKE/VYE HYE/HZE	28400-Z0Y-802ZB 28400-Z0Y-013ZA	HZEA/ HYEA/VKEA/VYEA
HRZ536C/C1	98079-56846	BPR6ES				17211-ZL8-023		Blister	22431-VE1-T00		28400-ZM0-J22ZB	

X10 Note: this reference is packaged in units of 10.

MULTIPACK Multipack available: see p. 10

(Subject to stock availability)

Pedestrian mowers

Chassis parts

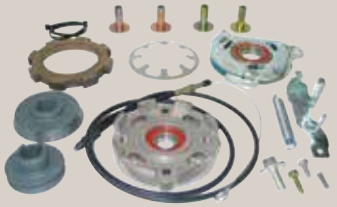

The Honda RotoStop kits, complete and hard-wearing, prolong the life of your machine (delivered with cable, belt, pulley and bolts).

This sign tells you to be careful during certain operations, notably concerning the blade tightening torque. Please refer to the safety instructions in the machine's user manual.

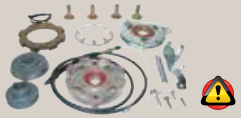

	RotoStop kit		Accelerator cable		Transmission cable		Shift cable		RotoStop cable		Blade brake cable	
	Reference	Version/Type/ Serial No.	Reference	Version/Type/ Serial No.	Reference	Version/ Type/	Reference	Version/Type/Serial No.	Reference	Version/Type	Reference	Version/Type
HRB423/K1	06726-VA9-H50	K1	54530-VF0-013		17910-VA9-000		54510-VA9-K40 54510-VG9E-H51 54510-VA9-E51	SE SXE SDE		54530-VA9-000 54530-VA9-P01		K1
HRB425C/C1	06750-VG8-000	~8079200	54530-VG8-003 54530-VE0-L01	~8079200 8079201~	17910-VG8-004		54510-VG8-852 54510-VA9-H51	QXE SXE			54530-VG8-751	
HRB475K0			54530-VE0-003		17910-VE0-000		54510-VE0-801					
HRB475K1			54530-VE0-003		17910-VE0-D50		54630-VE0-J52 54510-VA9-E51 54510-VE0-C51 54510-VE0-801 54510-VE0-851	H PDE, SDE Q SME, SXE, SE: ~8115798 SME, SXE, SE: 8115799~			54530-VE0-D51	PDE, SDE
HRB475K2	06750-VE0-L50	~8200000 8238199~	54530-VE0-L01 54530-VE0-M01	~8239640 8239641~	17910-VE0-D50		54630-VE0-L41 54510-VA9-E51 54510-VA9-H51 54510-VEO-M11	HME, HXE SDE QME, SME, SXE: ~8115240 QME: 81152412~			54530-VE0-D51	PDE, SDE
HRB475K3			54530-VE0-M01	8239641~	17910-VE0-D50		54510-VE0-M12 54630-VE0-L41	QME HME, HXE				
HRB475C					17910-VE0-D50		54510-VA9-E51				54530-VG9-751	
HRB476C	06750-VG8-000	~8092880	54530-VE0-L01 54530-VE0-M01	~8092880 8092881~	17910-VE0-D50		54630-VE0-L41 54510-VA9-H51 54510-VE0-M11 54510-VE0-M12	HXE SDE QXE, SXE: 8500000~8503600 QXE, SXE: 8503601~				
HRB476C1	06750-VG8-000		54530-VE0-M01		17910-VE0-D50		54630-VE0-L41 54510-VA9-E51 54510-VA9-H51 54510-VE0-M12	HXE SDE SXE: ~8499999 QXE, SXE: 8503601~			54530-VG9-751	P and S
HRB535K0/K1			54530-VE0-003		17910-VE2-003		54510-VE2-305	SXE	54630-VE2-801	SXE		
HRB535K2/K3			54530-VE0-003 54530-VE2-M12	K2 K3	17910-VE2-003 17910-VA4-000	K2 K3	54630-VE2-J03 54630-VE1-J11 54510-VE2-305 54510-VE2-306	H (K2) H (K3) S (K2) S (K3)	54630-VE2-801 54630-VE2-M00	SXE, SXF (K2) SXE, SXF (K3)		
HRB536C	06750-VE1-W51		54530-VE2-M12	~6128370	17910-VE1-R42		54630-VE1-J11 54510-VE2-306	H S	54630-VE2-M00	SXE		
HRB536C1	06750-VE1-W51		54530-VE2-M12 54530-VE1-T50	~6128370 6128371~	17910-VE1-R42		54630-VE1-J11 54510-VE1-T50	HXE TXE	06546-VE1-305	TXE, TXF		
HRB536C2	06750-VE1-W51		54530-VE1-T50	6128371~	17910-VE1-R42		54630-VE1-J11	HXE	54630-VE1-J11	HXE		

(Subject to stock availability)

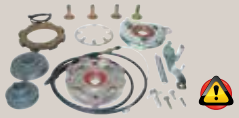

	RotoStop kit		Accelerator cable		Transmission cable		Shift cable		RotoStop cable		Blade brake cable	
	Reference	Version/Type/ Serial No.	Reference	Version/Type	Reference	Version/Type/ Serial No.	Reference	Version/Type	Reference	Version/Type/ Serial No.	Reference	Info
HRD535K0	06750-VF0-305	~8040105 (handlebar 2 parts)	17910-VA3-003		54510-VB5-800 54630-VF0-951 54510-VF0-003	Q H S	54630-VF0-003	SME, SXE	54530-VF0-013 54530-VA3-J03	HXE, SME, SXE, QME, QXE		
HRD535K1	06750-VF0-305 06750-VF0-A52	~8040105 (handlebar 2 parts) 8040106~8109632	17910-VA3-004	SME, TME	54510-VB5-800 54510-VF0-013	Q S	54630-VF0-013 54630-VF0-E51	SME: ~8105200 TME/SME: 8105201~	54530-VF0-004 54530-VA3-J03	SME, TME QME, QXE		
HRD535K2			17910-VA3-003	QME, QXE	06541-VB5-A01	QME, QXE			54530-VA3-J03	QME, QXE		
HRD536K0	06750-VF1-305	Handlebar 2 parts	17910-VA3-003		54630-VF0-951 54510-VF0-003	HME, HXE SME, SXE	54630-VF0-003	SME, SXE	54530-VF0-013			
HRD536K1	06750-VF1-305 06750-VF1-A50	Handlebar 2 parts Handlebar 1 part 8020295~8107600	17910-VA3-004	HME, HXE	54630-VF0-953	H			54530-VF0-004 54530-VF0-A51	~8107600 8107601~		
HRD536K2	06750-VF1-A50		17910-VA3-004	HME, HXE	54630-VF0-953	H			54530-VF0-A51			
HRD536K3	06750-VF1-A50	HXE	17910-VA3-004 17910-VA3-003	HME, HXE QME, QXE	54630-VF0-953 06541-VB5-A01	H QXE			54530-VF0-A51 54530-VA3-J01	H QXE		
HRD536K4	06750-VF1-A50	HXE	17910-VA3-004 17910-VA3-003	HME, HXE QME, QXE	54630-VF0-953 06541-VB5-A01	H QXE			54530-VF0-A51 54530-VA3-J01	H QXE		
HRD536C	06750-VF0-H50		17910-VA3-003		54630-VF0-951 54510-VF0-003	H S	54630-VF0-003	SXE	54530-VF0-013			
HRD536C1	06750-VF0-H50		17910-VA3-004 17910-VA3-003	SXE, TXE HXE	54630-VF0-953 54510-VF0-013 54510-VF0-E51	HXE SXE: ~8105200 SXE/TXE: 8105201~	54630-VF0-003 54630-VF0-E51	SXE: ~8105200 SXE TXE: 8105201~	54530-VF0-004 54530-VF0-A51	~8134320 8132521~		
HRD536C2	06750-VF0-H50		17910-VA3-004		54630-VF0-953 54510-VF0-E51	H T	54630-VF0-E51	TXE	54530-VF0-A51			
HRD536C3	06750-VF0-H50		17910-VA3-004		54630-VF0-953 54510-VF0-E51	H T	54630-VF0-E51	TXE	54530-VF0-A51			
HRG415C			CG81007167H0		CG81007167H0	C			CG54530-R01-003		CG81000638H0	
HRG415C1/C2 (IZY)			17850-VH3-003		54510-VH3-852						54530-VH3-004	
HRG415C3 (IZY)			Auto choke		54510-VH3-N11						54530-VH3-N11	
HRG465C1/C2 (IZY)			17850-VH3-003		54510-VH3-852						54530-VH3-004	
HRG465C3 (IZY)			Auto choke		54510-VH3-N11 54510-VH3-N12	SDEE SDEX					54530-VH4-N11	
HRG536C			17850-VG3-010		54510-VG4-B51 06540-VG4-B51	S Assembly: see GIT2					54530-VG3-010 06540-VG4-B51	Cable only Cable + dutch lever kit

(Subject to stock availability)

This sign tells you to be careful during certain operations, notably concerning the blade tightening torque. Please refer to the safety instructions in the machine's user manual.

Pedestrian mowers

Chassis parts

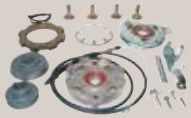

	RotoStop kit		Accelerator cable		Transmission cable		Shift cable		RotoStop cable		Blade brake cable	
	Reference	Packaging	Reference	Version/Type/ Serial No.	Reference	Version/Type/ Serial No.	Reference	Version/Type/ Serial No.	Reference	Version/Type/ Serial No.	Reference	Version/ Type
HRG536C1/C2/C3 (IZY)			17850-VG3-D01 17850-VG4-J50	C1 C2/C3	54510-VG4-C50 54510-VG4-J50	C1 C2/C3					54530-VG3-D01 54530-VG4-J50	C1 C2 C3
HRG536C4/C5 (IZY)			17850-VG4-J50 Auto choke	C4 C5	54510-VG4-J50 54510-VG4-C50	C4 C5					54530-VG4-J50 54530-VG3-D01	C4 C5
HRG536C6			Auto choke		54510-VG4-C50						54530-VG3-D01	
HRH536K0/K1/K2			17910-VA3-003		54520-VB5-P01 54510-VB5-800 06541-VB5-A01	H (K1/K2) Q (K1) Q (K2)			54530-VA3-J03			
HRH536K3/K4	05150-VA3-505	Includes: 54530-VA3-J03 75110-VA4-000 75150-VA3-J01 75182-VA3-J00 90105-VH3-K10 90481-430-000 91102-VA4-013 91103-VA4-003 94401-16150	17910-VA3-003		54520-VB5-P01 06541-VB5-A01	H Q			54530-VA3-J01			
HRM535/K1/K2/K3			17910-VE2-003 17910-VA4-000 17910-VE2-M11	K0/K1/K2 SXE (K3) SDE (K3)	54510-VE2-305 54510-VE2-306	K3	54630-VE2-801 54630-VE2-M00	K0/K1/K2 K3	54530-VE0-003 54530-VE2-M12	K0/K1/K2 K3	54530-VE2-D01 54530-VE1-N10	SDE (K2) SDE (K3)
HRM536C/C1			17910-VE1-R42		54510-VE2-306 54510-VE1-T50	C C1	54630-VE2-M00 06546-VE1-305	C C1	54530-VE2-M12 54530-VE1-T50	C/C1: ~6128370 C1: 6128371~		
HRS536C/C1/C2/C3			17850-VG3-010 17850-VG3-D01	C C1/C2/C3	06540-VG3-B01 54510-VG3-D00	C C1/C2					06540-VG3-010 54530-VG3-D01	C C1/C2/C3
HRX426C			17850-VK7-013 17850-VK7-851	PXE, QXE, RXE, SXE PDE SDE	54510-VK7-753 54510-VK7-953 54510-VK7-A53	SXE,SDE:~1030000 SDE: 1030001~ QXE: ~1030000			54530-VK7-013		54530-VK7-951	PDE, SDE
HRX476C			17850-VK8-013 17850-VK8-951	SDE: 1030001~	54510-VK7-753 54510-VK8-A53 54630-VK8-B53	SXE QXE HXE			54530-VK8-013		54530-VK8-951	
HRX476C1			17910-VK8-D50 17910-VK8-M50	PKEE VKEE, VYEE	54510-VK8-M50	VKEE, VYEE			54530-VK8-M50	VYEE	54530-VK8-N50 54530-VK8-D51	VKEE PKEE
HRX537C			17910-VH7-000		54510-VH7-010 06225-VH7-305	TDE HME, HXE	54630-VH7-000	TDE	54530-VH7-000	HME, HXE	54530-VH7-800	TDE
HRX537C1			17910-VH7-000 17910-VH7-F50	TDE, HXE, HME VYE	54510-VH7-010 54510-VL0-B00 06225-VH7-305	TDE VYE HXE, HME	54630-VH7-000	TDE	54530-VH7-000 75180-VH7-F51	HXE, HME VYE: Handle, complete	54530-VH7-800	TDE
HRX537C2			17910-VH7-F50 17910-VH7-000	VYE HYE, HZE	54510-VH7-L00 54630-VH7-A02	VKE, VYE HYE, HZE			54530-VH7-K50 54530-VH7-000	VYE HYE, HZE	54530-VH7-K00	VKE
HRZ536C/C1			17850-VG3-D01		54510-VG4-C01		47340-VG4-T00	TDE			54530-VG3-D01	

(Subject to stock availability)

This sign tells you to be careful during certain operations, notably concerning the blade tightening torque. Please refer to the safety instructions in the machine's user manual.

We recommend **checking the blade for signs of wear. Replace the blade if it is nicked or cracked.**

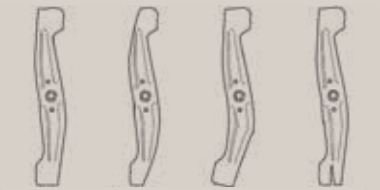

This sign tells you to be careful during certain operations, notably concerning the blade tightening torque. Please refer to the safety instructions in the machine's user manual.

MULTIPACK Multipack available: see p. 10

	Blade		Grass bag		Rear wheel Pushed mower rear wheel		Self-propelled mower rear wheel		Pushed/self-propelled mower front wheel	
	Reference	Serial No.	Reference	Version/Type/ Serial No.	Reference	Version	Reference	Version	Reference	Version/Type/ Serial No.
HRB423/K1	72511-VA9-H50 MULTIPACK		81320-VA9-B51		44710-VE0-751ZB		42710-VE0-800ZA		44710-VA9-B50ZA 44710-VA9-B60ZB	~8066637 8066638~
HRB425C/C1	72511-VG8-A50 MULTIPACK		81320-VG8-003 81320-VG8-A51	C C1	44710-VE0-751ZB		42710-VE0-800ZA		44710-VA9-B60ZB	
HRB475K0	72511-VE0-N00 MULTIPACK		81320-VE0-B52		44710-VE0-751ZB		42710-VE0-800ZA		44710-VE0-751ZB	
HRB475K1	72511-VE0-N00 MULTIPACK		81320-VE0-B52		44710-VE0-751ZB		42710-VE0-800ZA		44710-VE0-751ZB	
HRB475K2	72511-VE0-N00 MULTIPACK		81320-VE0-B52		44710-VE0-751ZB		42710-VE0-800ZA		44710-VE0-751ZB	
HRB475K3	72511-VE0-N00 MULTIPACK		81320-VE0-N01				42710-VE0-800ZA		44710-VE0-751ZB	
HRB475C	72511-VE0-N00 MULTIPACK		81320-VE0-B52		44710-VE0-751ZB		42710-VE0-800ZA		44710-VE0-751ZB	
HRB476C	72511-VE0-N00 MULTIPACK		81320-VE0-B52				42710-VE0-800ZA		44710-VE0-751ZB	
HRB476C1	72511-VE0-N00 MULTIPACK		81320-VE0-N01		44710-VE0-751ZB		42710-VE0-800ZA		44710-VE0-751ZB	
HRB535K0/K1	72511-VE1-652 MULTIPACK		81320-VE1-650		44710-VE0-000	K0	42710-VE0-800ZA		44710-VE0-000	
HRB535K2/K3	72511-VE1-652 MULTIPACK		81320-VE1-650				42710-VE2-800 42710-VF1-800	K2 K3	44710-VE0-000 44710-VE0-751ZB	K2 K3
HRB536C	72511-VE1-652 MULTIPACK		81320-VE1-650				42710-VF1-000		44710-VE0-751ZB	
HRB536C1	72511-VE1-652 MULTIPACK		81320-VE1-650				42710-VE2-M00ZA		44710-VE2-M00ZA	
HRB536C2	72511-VE1-E50 MULTIPACK		81320-VE1-E51				42710-VE2-M00ZA		44710-VE2-M00ZA	
HRD535K0	72511-VE1-652 MULTIPACK		81320-VF0-023 81320-VF1-023						44710-VE0-751ZB 44710-VF0-000	~8040105 8040106~
HRD535K1	72511-VF0-E50 72511-VG0-C50 MULTIPACK	~8109632 (except type Q) 8109633~	81320-VF1-023				42710-VF1-000		44710-VF0-000	
HRD535K2	72511-VG0-C50 MULTIPACK		81320-VF1-D51						44710-VF0-000	
HRD536K0	72511-VE1-652 MULTIPACK		81320-VF0-023				42710-VF1-000		44710-VF0-000	
HRD536K1	72511-VF0-E50 72511-VG0-C50 MULTIPACK	~8134320 8134321~	81320-VF0-023				42710-VF1-000		44710-VF0-000	
HRD536K2	72511-VG0-C50 MULTIPACK		81320-VF0-023				42710-VF1-000		44710-VF0-000	
HRD536K3	72511-VG0-C50 MULTIPACK		81320-VF1-D51				42710-VF1-000		44710-VF0-000	
HRD536K4	72511-VG0-C50 MULTIPACK		81320-VF0-J11 81320-VF1-D51	QXE HXE			42710-VF1-000		44710-VF0-000	
HRD536C	72511-VE1-652 MULTIPACK		81320-VF0-023				42710-VF1-000		44710-VE0-751ZB	
HRD536C1	72511-VF0-E50 72511-VG0-C50 MULTIPACK	~8134320 8134321~	81320-VF1-D51				42710-VF1-000		44710-VF0-000	
HRD536C2	72511-VG0-C50 MULTIPACK		81320-VF1-D51				42710-VF1-000		44710-VF0-000	
HRD536C3	72511-VG0-C50 MULTIPACK		81320-VF1-D51				42710-VF1-000		44710-VF0-000	

(Subject to stock availability)

Pedestrian mowers

Chassis parts

	Blade		Grass bag		Pushed mower rear wheel	Self-propelled mower rear wheel		Pushed/self propelled mower front wheel	
	Reference	Version/ Type / Serial No.	Reference	Version	Reference	Reference	Version	Reference	Version/Type
HRF464	CG81004397H0		CG81002140H1		CG81007313H1			CG81007311H0	
HRF465	CG81004397H0		CG81002140H1		CG81007313H1			CG81007311H0	
HRG413	CG81004346H3	8600001~8699999	See GIT2		CG81007318H1	CG81007318H1		CG81007317H0	
HRG415C	CG81004396H0		CG81002175H0		CG81007318H1	CG81007318H1		CG81007317H0	
HRG415C1/C2 (IZY)	72511-VH3 000		81320-VH3-013		42710-VH3-000ZA	42710-VH3-851ZA		44710-VH3-000ZA	
HRG415C3 (IZY)	72511-VH3-N10 *		81320-VH3-013		42710-VH3-000ZB	42710-VH3-850ZB		44710-VH3-000ZB	
HRG465C	CG81004397H0 CG81004391H0	SD, PD, SX	CG81002175H0		CG81007318H1	CG81007318H1		CG81007317H0	
HRG465C1/C2 (IZY)	72511-VH4-000 MULTIPACK		81320-VH4-013		42710-VH3-000ZA	42710-VH3-851ZA		44710-VH3-000ZA	
HRG465C3 (IZY)	72511-VH4-N10*		81320-VH4-013		42710-VH3-000ZB	42710-VH3-850ZB		44710-VH3-000ZB	
HRG536C	72511-VE1-652 MULTIPACK		81320-VG4-A51		42710-VE2-M00ZA	42710-VE2-M00ZA		44710-VE2-M00ZA	
HRG536C1/C2/C3 (IZY)	72511-VE1-652 MULTIPACK		81320-VG4-A51		42710-VE2-M00ZA	4 2710-VE2-M00ZA		44710-VE2-M00ZA	
HRG536C4/C5 (IZY)	72511-VE1-E50 MULTIPACK		81320-VG4-A51 81320-VG4-P50	C4 C5		42710-VE2-M00ZA 42710-VE2-M00ZD		44710-VE2-M00ZA 44710-VE2-M00ZC	
HRG536C6	72511-VE1-E50 MULTIPACK		81320-VG4-P50			42710-VE2-M00ZD		44710-VE2-M00ZC	
HRH536K0/K1/K2	72511-VE1-652 MULTIPACK 72511-VG0-C50 MULTIPACK	K0 K1/K2	81320-VG0-013			42810-VB5-F43ZB		42710-VB5-F41ZB	
HRH536K3/K4	72511-VG0-C50 MULTIPACK 72511-VF0-K60 MULTIPACK	K3 K4	81320-VG0-013			42810-VB5-F43ZB		42710-VB5-F41ZB	
HRM535/K1/K2/K3	72531-VE2-020 MULTIPACK 72511-VG4-K00	Upper blade Lower blade	81320-VE1-650		42710-VE2-800	42710-VE2-800 42710-VF1-000			K0/K1/K2 K3
HRS536C/C1	72531-VE2-020 MULTIPACK 72511-VG4-K00	Upper blade Lower blade	81320-VE1-650			42710-VF1-000 42710-VE2-M00ZA		44710-VE0-751ZB 44710-VE2-M00ZA	C C1
HRS536C/C1/C2/C3	72511-VG3-000					44710-VE2-M00ZA		44710-VE2-M00ZA	
HRX426C	72511-VK7-000 MULTIPACK		81320-VG8-A51		44700-VK8-000	04427-VK8-750		44700-VK8-000	
HRX476C	72511-VK8-000 MULTIPACK		81320-VK8-003		44700-VK8-000	04427-VK8-750		44700-VK8-000	
HRX476C1	72531-VK8-J50 72511-VK8-J50	Upper blade Lower blade	81320-VK8-J50		42710-VK8-J50ZA				
HRX537C	72511-VH7-000 MULTIPACK		81320-VE1-E51			42710-VH7-000ZA		44710-VH7-000ZA 44710-VH7-B00ZA	HXE, SDE HME
HRX537C1	72531-VH7-000 72511-VH7-000	Upper blade Lower blade	81320-VE1-E51			42710-VH7-000ZA		44710-VH7-000ZA 44710-VH7-B00ZA	TDE,HXE, VYE HME
HRX537C2	72531-VH7-000 72511-VH7-000	Upper blade Lower blade	81320-VE1-E51			42710-VH7-000ZA		44710-VH7-000ZA 44710-VH7-B00ZA	VKE, VYE, HYE HZE
HRZ536C/C1	72511-VE1-E50 MULTIPACK		81320-VG4-M50			42710-VG3-B00		42710-VG3-000	

(Subject to stock availability)

*Make sure you have the right spacer for fixing the C3. If not, order spacer: 72617-VH3-N10.

This sign tells you to be careful during certain operations, notably concerning the blade tightening torque. Please refer to the safety instructions in the machine's user manual.

MULTIPACK Multipack available: see p. 10

Electric mowers and weedmowers

Electric mowers

	Blade	Rear wheel	Rear hub cap	Front wheel	Front hub cap
Reference	Reference	Reference	Reference	Reference	Reference
HRE330A2 PLE	72511-VP5-000	42711-VP5-003	42719-VP5-000	44711-VP5-003	44719-VP5-000
HRE370A2 PLE	72511-VP6-000	42711-VP6-003	42719-VP5-000	44711-VP6-003	44719-VP5-000
HRE410K2 PE	CG81004396H0	CG81007328H0	CG22110251H0	CG81007326H0	CG22110252H1

Weedmowers

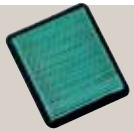

	NGK spark plug		Nippon Denso spark plug		Air filter	Starter
	Reference	Info	Reference	Info	Reference	Reference
UM21	98079-55846	BPR5ES	98079-55855	W16EPR-U	17210-ZE7-505	28400-ZE7-003ZC
UM2160	98079-55846	BPR5ES	98079-55855	W16EPR-U	17210-ZE7-505	28400-ZE7-003ZC
UM2460	98079-55846	BPR5ES	98079-55855	W16EPR-U	17210-ZE7-505	28400-ZE7-003ZC
UM515	98079-55846	BPR5ES			17211-ZG9-M00	28400-ZG9-803
UM516C	98079-56846	BPR6ES			17211-ZL8-023	28400-ZM0-633ZD
UM536	98079-55846	BPR5ES	98079-55855	W16EPR-U	17211-ZE7-W03	28400-ZE7-M02
UM536K1	98079-55846	BPR5ES	98079-55855	W16EPR-U	17211-ZE7-W03	28400-ZE7-M02
UM536K2	98079-55846	BPR5ES	98079-55855	W16EPR-U	17210-Z1V-003	28400-ZE7-003ZC
UM536K3	98079-55846	BPR5ES	98079-55855	W16EPR-U	17210-Z1V-003	28400-Z1V-013ZB
UM616	98079-55846	BPR5ES	98079-55855	W16EPR-U	17211-ZE7-W03	28400-ZE7-M02
UM616K1	98079-55846	BPR5ES	98079-55855	W16EPR-U	17211-ZE7-W03	28400-ZE7-M02
UM616K2	98079-55846	BPR5ES	98079-55855	W16EPR-U	17210-Z1V-003	28400-ZE7-003ZC
UM616K3	98079-55846	BPR5ES	98079-55855	W16EPR-U	17210-Z1V-003	28400-Z1V-013ZB

(Subject to stock availability)

This sign tells you to be careful during certain operations, notably concerning the blade tightening torque. Please refer to the safety instructions in the machine's user manual.

Note: this reference is packaged in units of 10.

Multipack available: see p. 10

Weedmowers

Chassis parts

	Brake cable		Clutch drive cable	Transmission cable	Throttle cable	Shift cable	Cut height cable
	Reference	Info	Reference	Reference	Reference	Reference	Reference
UM21			54510-VA8-003	54530-VA8-003	17910-VF7-C61		
UM2160			54510-VA8-003	54530-VA8-A00	17910-VA8-A00		
UM2460	47620-VD8-740 47630-VD8-740	Handle side Brake side			17910-VD8-000	54520-VD8-000	
UM515				PB13249	PB13175A		PB13151A
UM516C				PB13152	PB13175A		PB13151A
UM536	47620-VD8-740 47630-VD8-740	Handle side Brake side	54510-VA8-003	54530-VA8-A00	17910-VA8-B20		
UM536K1	47620-VD8-740 47630-VD8-740	Handle side Brake side	54510-VA8-003	54530-VA8-A00	17910-VA8-B20		
UM536K2	47620-VD8-740 47630-VD8-740	Handle side Brake side	54510-VA8-003	54530-VA8-A00	17910-VA8-B20		
UM536K3	47620-VD8-740 47630-VD8-740	Handle side Brake side	54510-VA8-003	54530-VA8-A00	17910-VA8-B20		
UM616	47620-VD8-740 47630-VD8-740	Handle side Brake side		54530-VD8-010	17910-VD8-820	54520-VD8-820	
UM616K1	47620-VD8-740 47630-VD8-740	Handle side Brake side		54530-VD8-010	17910-VD8-820	54520-VD8-820	
UM616K2	47620-VD8-740 47630-VD8-740	Handle side Brake side		54530-VD8-010	17910-VD8-F20	54520-VD8-820	
UM616K3	47620-VD8-740 47630-VD8-740	Handle side Brake side		54530-VD8-010	17910-VD8-F20	54520-VD8-820	

	Blade clutch or engine brake cable		Rear wheel	Front wheel	Belt	Blade
	Reference	Info	Reference	Reference	Reference	Reference
UM21	54530-VA8-003	Brake clutch	42810-VA7-023	42710-VA4-003	23161-VA8-003	72511-VA2-505
UM2160	54530-VA8-A00	Brake clutch	42810-VA7-023	42710-VA4-003	23161-VA8-003	72511-VA2-505
UM2460	54530-VD8-010	Brake clutch	42810-VA7-023	44710-VD8-003	22431-VD8-003	72511-VD8-000
UM515	PB13146A	Engine brake	PB14113	PB14102	PB13466	PB13989
UM516C	PB13194B	Engine brake	PB14113	PB14102	PB13466	PB13989
UM536	54530-VA8-A00	Brake clutch	42810-VA7-023	42710-VA4-003	23161-VA8-003	72511-VA2-505
UM536K1	54530-VA8-A00	Brake clutch	42810-VA7-023	42710-VA4-003	23161-VA8-E21	72511-VA2-505
UM536K2	54530-VA8-A00	Brake clutch	42810-VA7-023	42710-VA4-003	23161-VA8-E21	72511-VA2-505
UM536K3	54530-VA8-A00	Brake clutch	42810-VA7-023	42710-VA4-003	23161-VA8-E21	72511-VA8-L20
UM616	54530-VD8-010	Brake clutch	42810-VA7-023	44710-VD8-003	22431-VD8-003	72511-VD8-000
UM616K1	54530-VD8-010	Brake clutch	42810-VA7-023	44710-VD8-003	22431-VD8-003	72511-VD8-000
UM616K2	54530-VD8-010	Brake clutch	42810-VA7-023	44710-VD8-003	22431-VD8-003	72511-VD8-000
UMK616K3	54530-VD8-010	Brake clutch	42810-VA7-023	44710-VD8-003	22431-VD8-003	72511-VD8-L20

(Subject to stock availability)

This sign tells you to be careful during certain operations, notably concerning the blade tightening torque. Please refer to the safety instructions in the machine's user manual.

Multipack available: see p. 10

Ride-on mowers

Accessories

New

Think about **protecting your equipment** once the work is done with the **new protective cover** developed by Honda!

INDISPENSABLE!

The Honda ride-on mower lifting jack allows full maintenance and cleaning of the machine in complete safety with just a few turns of the handle!

USEFUL!

The OPTIMATE 12V automatic battery charger charges, recovers and maintains all lead acid batteries with capacities from 2.5 Ah to 32 Ah. It is used for (normal, GEL, MF) lead acid batteries of ride-on mowers, generators and snowblowers.

Delivered with alligator clips and charge adapter to be attached to the battery.

PRACTICAL !

Mower deck scraper

The GOKO 350 deck cleaner/scraper is the ideal accessory for cleaning lawn mowers.

❶

❷

Honda OptiMate Pack		Hona OptiMate	
Reference	Packaging	Reference	Description
❶ 08M51-EWA-835E	Honda OptiMate + display box 1: - 3 x Honda OptiMate 3+ - 3 x Honda OptiMate 5 - 1 x display (can contain up to 3 OptiMate)	❷ 08M51-EWA-802Z	OptiMate 3+*
❶ 08M51-EWA-850E	Honda OptiMate + display box 2: - 6 x Honda OptiMate 5 - 1 x display (can contain up to 3 OptiMate)	❷ 08M51-EWA-800E	OptiMate 5**

* For lead/acid batteries from 2 to 32 Ah
** For lead/acid batteries from 7 to 120 Ah

Mower deck scraper GOKO350		Ride-on mower lifting jack			Protective cover
Reference	Packaging	Reference	Characteristics		Reference
GOKO350X5	Pack of 5	06810-VK1-000HE	Standard	All models to 350 kg	06310-VK1-003HE
GOKO350X10	Pack of 10	LEVETREUILHF	A crank		
GOKO350X15	Pack of 15				

Ride-on mowers

Accessories and maintenance

➔ The **Honda hour meter** keeps track of your product's service life !

Hour meter	
Reference	Application
08174-ZL8-010HE	All models

	Optimate and Battery Charger		Deflector	Towing hook
	Reference	Info	Reference	Reference
HF2315/K1/K2	08M51-EWA-802Z	OptiMate 3+*	80609-VK1-003	CG99900006H0
HF2415				
HF2417/K1/K2/K3				
HF2620/K1				
HF2622				
HF2114	CG82180050H0	Gel battery	See GIT2	CG99900080H1
HF1211	CG82180050H0	Gel battery	See GIT2	CG99900006H0 Except for HF1211
HF2113				
HF2213				
HF2218				
HF2114				
HF2216				
HF2220				

* For lead/acid batteries from 2 to 32 Ah

Rapidon 6 fuel can	
Reference	Packaging
01296-RAP-505	Pack of 5
01296-RAP-DIS	Pack of 15 + display box

Mower maintenance				
Description	Reference	Packaging	Multipack Reference	Packaging
4 stroke oil 10W30 - SJ SH	❶ 08221-888-101HE	1l bottle	08221-888-101MP	24 1l bottles
4 stroke oil 10W30 - SJ SH	❷ 08221-888-061HE	0.6 liter can	08221-888-061MP	24 0.6l cans
Hydrostatic oil (HST)	❸ 08208-999-02HE	1l bottle		

(Subject to stock availability)

PRO Honda fuel stabiliser and carburettor cleaner		
Description	Reference	Packaging
Fuel Stabiliser	❶ 08CXZ-FSC-250	12 bottles of 240 ml
Carburettor Cleaner	❷ 08CAD-CCL-400	12 aerosols of 400 ml

(Subject to stock availability)

Ride-on mowers

Mulching

This **kit** offers several advantages:

Savetime You no longer need to remove the cut grass: there is no more need to empty the mower bag, which amounts to half the time spent mowing.

A healthy lawn
the mulch provides natural nutrients to the lawn as it breaks up and prevents it from drying out during the summer.

No grass clippings:
no more walks to the compost heap

This sign tells you to be careful during certain operations, notably concerning the blade tightening torque. Please refer to the safety instructions in the machine's user manual.

	Mulching kit	Mulching blade		Mulching plug
	Reference	Reference	Positioning	Reference
HF1211K2	Original mulching blades Only the cover is optional Original mulching blades	CG84109503H0		CG99900036H0
HF2114K2		80519-VK1-003 80520-VK1-003	Left Right	80597-VK1-003
HF2216K1		80515-VK1-003 80516-VK1-003	Left Right	See GIT2
HF2220K1		80517-VK1-003 80518-VK1-003	Left Right	80599-VK1-003
HF2315 HF2315K1 SBE SBF		80519-VK1-003 80520-VK1-003	Left Right	80597-VK1-003
HF2415		80515-VK1-003 80516-VK1-003	Left Right	80598-VK1-003
HF2417K0		80515-VK1-003 80516-VK1-003	Left Right	80598-VK1-003
HF2620K0		80517-VK1-003 80518-VK1-003	Left Right	80599-VK1-003
HF2622*	Integrated	72531-VK1-B11** 72511-VK1-B11**	Left Right	Integrated
HF2315K1 HMF	06805-VK1-C10	80519-VK1-003 80520-VK1-003	Left Right	80597-VK1-003
HF2315K2 All models	06805-VK1-C10	80519-VK1-003 80520-VK1-003	Left Right	80597-VK1-003
HF2417K1/K2/Optiflow*	06805-VK1-A10	80515-VK1-003 80516-VK1-003	Left Right	80598-VK1-003
HF2417K3 HBF/Optiflow*	06805-VK1-A10	80515-VK1-003 80516-VK1-003	Left Right	80598-VK1-003
HF2417K3 HMF/HTF	Integrated	72531-VK1-A11** 72511-VK1-A10**	Left Right	Integrated
HF2620K1/Optiflow*	06805-VK1-B10	80517-VK1-003 80518-VK1-003	Left Right	80599-VK1-003

(Subject to stock availability)

* Installing the mulching kit requires disassembly of the turbines of the Optiflow system.
** Original blade

Ride-on mowers

Engine parts

	NGK spark plug		Nippon Denso spark plug		Oil filter	Air filter	Battery	
	Reference	Info	Reference	Info	Reference	Reference	Reference	Type
HF1211/K1	98079-55846 X10	BPR5ES				17211-ZF5-V01 MULTIPACK	31500-751-000HE	
HF1211K2	98079-55846 X10	BPR5ES				17210-Z1E-801	31500-751-000HE	
HF2113	98079-55846 X10	BPR5ES	98079-55855	W16EPRU		17211-ZF5-V01 MULTIPACK	31500-751-000HE	
HF2114/K1/K2	98079-55846 X10	BPR5ES	98079-55855	W16EPRU	15400-PFB-014	17211-Z0A-013	31500-751-000HE	
HF2213/K1/K2/K3	98079-55846 X10	BPR5ES	98079-55855 Except K2/K3	W16EPRU		17210-ZF5-505	31500-751-000HE	
HF2216	98079-55846 X10	BPR5ES	98079-55855	W16EPRU	15400-PFB-014	17211-Z0A-013	31500-751-000HE	
HF2216K1	98079-55846 X10	BPR5ES	98079-55855	W16EPRU	15400-PFB-014	17211-Z0A-013	31500-751-000HE	
HF2218K0 / K1	98079-55846 X10	BPR5ES	98079-5585V	J16CRU	15400-ZJ1-004 MULTIPACK	17010-ZJ1-000	31500-751-000HE	
HF2218K2	98079-5,587V	ZGR5A	98079-5585V	J16CRU	15400-PFB-014	17210-ZJ1-842	31500-751-000HE	
HF2220	98079-5,587V	ZGR5A	98079-5585V	J16CRU	15400-PFB-014	17210-ZJ1-842	31500-751-000HE	
HF2220K1	98079-5,587V	ZGR5A	98079-5585V	J16CRU	15400-PFB-014	17210-ZJ1-842	31500-751-000HE	
HF2315	98079-55846 X10	BPR5ES	98079-55855	W16EPRU	15400-PFB-014	17211-Z0A-013	80183-VK1-023	HF2315K1SBF
HF2315K1SBF HF2315K1 Optiflow	98079-56846 X10	BPR5ES	98079-55855	W16EPRU	15400-PFB-014	17211-Z0A-013	80183-VK1-023	SBE/HME
HF2315K2	98079-56846 X10	BPR5ES	98079-55855	W16EPRU		17211-Z0A-013	31500-VK1-F01	
HF2415	98079-56846 X10	BPR5ES	98079-55855	W16EPRU	15400-PFB-014	17211-Z0A-013	80183-VK1-023	SBE
HF2417	98079-56846 X10	BPR5ES	98079-55855	W16EPRU	15400-PFB-014	17211-Z0A-013	80183-VK1-023	HME/HTE
HF2417K1 Optiflow	98079-54846 X10	BPR5ES	98079-55855	W16EPRU	15400-PFB-014	17211-Z0A-013	80183-VK1-023	HME/HTE
HF2417K2	98079-54846 X10	BPR5ES	98079-55855	W16EPRU	15400-PFB-014	17211-Z0A-013	80183-VK1-023	
HF2417K3	98079-56846 X10	BPR5ES	98079-55855	W16EPRU		17211-Z0A-013	31500-VK1-F01	
HF2620	98079-5,587V	ZGR5A	98079-5585V	J16CRU	15400-PFB-014	17210-ZJ1-842	80183-VK1-023	HME/HTE
HF2620K1 Optiflow	98079-5,587V	ZGR5A	98079-5585V	J16CRU	15400-PFB-014	17210-ZJ1-842	80183-VK1-023	HME/HTE
HF2622	98079-5587G	ZFR5F			15400-PFB-014	17210-Z6M-010	31500-VK1-F01	HM/HT

(Subject to stock availability)

X10 Note: this reference is packaged in units of 10.

MULTIPACK Multipack available: see p. 10

Ride-on mowers

Chassis parts

*Dual function: mulching + collecting

	Transmission belt		Lower cutter deck belt		Upper cutter deck belt		Left blade		Right blade	
	Reference	Version/Type	Reference	Version	Reference	Version	Reference	Version/Type	Reference	Version/Type
HF1211/K1/K2	CG35061405H0 CG35061404H0 CG35061400H0	H (K0) H (K1/K2) S (K1/K2)	CG35061423H0						CG84109500H0 GC84109503H0	K0/K1: single blade K2: single blade (dual function)*
HF2113	CG35062010H0 CG35062000H1	H S			80305-Y09-003		CG82004344H1		CG82004345H1	
HF2114/K1	CG35061980H0 CG35062000H1	HE SE			80305-Y09-003		CG82004344H1		CG82004345H1	
HF2114K2	CG35061980H0 CG35062000H1	HE SE			80305-Y09-003		80519-VK1-003		80520-VK1-003	
HF2213/K1/K2/K3	CG35061502H0 CG35061501H0 CG35061426H0 80477-VK1-003	K0 K1 H (K2) H (K3)	80481-VK1-003		80480-VK1-003		72531-VK1-A11		72511-VK1-A11	
HF2216	80477-VK1-003		80481-VK1-003		80480-VK1-003		72531-VK1-A11		72511-VK1-A11	
HF2216/K1	80477-VK1-003		80481-VK1-003		80480-VK1-003		80515-VK1-003		80516-VK1-003	
HF2218K0 / K1	CG35061501H0 CG35061426H0	S H (K1)	80482-VK1-003 80481-VK1-003	K0 K1	80479-VK1-003 80481-VK1-003	K0 K1	72531-VK1-B11 72531-VK1-A11	K0 K1	72511-VK1-B11 72511-VK1-A11	K0 K1
HF2218K2	80477-VK1-003		80482-VK1-003		80479-VK1-003		72531-VK1-B11		72511-VK1-B11	
HF2220	80477-VK1-003	H	80482-VK1-003		80479-VK1-003		72531-VK1-B11		72511-VK1-B11	
HF2220K1	80478-VK1-003 80477-VK1-003	S H	80482-VK1-003		80479-VK1-003		80517-VK1-003		80518-VK1-003	
HF2315	80478-VK1-003 80477-VK1-003	S H			80305-Y09-003 80305-Y09-003SH	Reinforced standard	80519-VK1-003		80520-VK1-003	
HF2315K1SBF HF2315K1 Optiflow	80478-VK1-003 80477-VK1-003	S H			80305-Y09-003		80519-VK1-003 80394-Y09-003	SBF HMF	80520-VK1-003 80395-Y09-003	SBF HMF
HF2315K2	80478-VK1-003 80477-VK1-003	S H			80305-Y09-003		80519-VK1-003 80394-Y09-003	SBF HMF	80520-VK1-003 80395-Y09-003	
HF2415	80478-VK1-003		80481-VK1-003		80480-VK1-003		80515-VK1-003		80516-VK1-003	
HF2417	80477-VK1-003		80481-VK1-003		80480-VK1-003		80515-VK1-003		80516-VK1-003	
HF2417K1 Optiflow	80477-VK1-003		80481-VK1-003		80480-VK1-003		72531-VK1-A11		72511-VK1-A11	
HF2417K2	80477-VK1-003		80481-VK1-003		80480-VK1-003		72531-VK1-A11		72511-VK1-A11	
HF2417K3	80477-VK1-003		80481-VK1-003		80480-VK1-003		72531-VK1-A11		72511-VK1-A11	
HF2620	80477-VK1-003		80482-VK1-003		80479-VK1-003		80517-VK1-003		80518-VK1-003	
HF2620K1 Optiflow	80477-VK1-003		80482-VK1-003		80479-VK1-003		72531-VK1-B11		72511-VK1-B11	
HF2622	80477-VK1-003		76182-VK1-E11		76181-VK1-E11		72531-VK1-B11		72511-VK1-B11	

This sign tells you to be careful during certain operations, notably concerning the blade tightening torque. Please refer to the safety instructions in the machine's user manual.

(Subject to stock availability)

Ride-on mowers - Old models

Engine parts

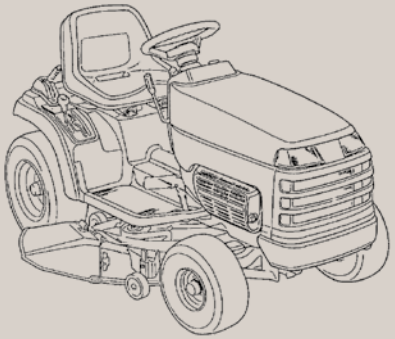

	NGK spark plug		Nippon Denso spark plug		Oil filter	Air filter	Battery
	Reference	Info	Reference	Info	Reference	Reference	Reference
H1011	98079-55846 X10	BPR5ES	98079-55855	W16PR-U		17210-ZF5-505	31500-772-003
H1011H	98079-55846 X10	BPR5ES	98079-55855	W16PR-U		17210-ZF5-505	31500-772-003
H1011K1/HK1	98079-55846 X10	BPR5ES	98079-55855	W16PR-U		17210-ZF5-505	31500-772-003
H2013	98079-55846 X10	BPR5ES	98079-55855	W16PR-U		17210-ZF5-505	31500-772-003
H2013K1/K2	98079-55846 X10	BPR5ES				17211-ZF5-V01 MULTIPACK	31500-772-003
H3009	98079-55846 X10	BPR5ES				17210-ZF5-505	31500-751-612
H3011H	98079-55846 X10	BPR5ES	98079-55855	W16PR-U		17210-ZF5-505	31500-751-612
H4013SF	98079-55846	BPR5ES	98079-55855	W16PR-U		17210-ZF5-505	31500-751-612
H4514H	98076-54747	BPR4HS			15400-PFB-014	17211-758-000	31500-751-612
HT3810	98076-54746	BR4HS				17210-890-505	31500-751-612
HT3813	98076-54747	BPR4HS			15400-PFB-014	17210-ZA0-506	31500-751-612
HT3813K1	98076-54747	BPR4HS			15400-PFB-014	17210-ZA0-506	31500-751-612
HT-R3009	98079-55846 X10	BPR5ES				17210-ZF5-505	31500-KM1-837
HT-R3811	98079-55846 X10	BPR5ES	98079-55855	W16EPRU		17210-ZF5-505	31500-KM1-837

(Subject to stock availability)

Mulching

X10 Note: this reference is packaged in units of 10.

This sign tells you to be careful during certain operations, notably concerning the blade tightening torque. Please refer to the safety instructions in the machine's user manual.

MULTIPACK Multipack available: see p. 10

Mulching blade	
	Reference
H2013H	72511-758-H60
H3009	72511-758A00
H3011	72511-763-R00
H4013SF	72511-758-H60
H4514H	72511-758-H60
H1011	72511-763-R00

(Subject to stock availability)

Ride-on mowers - Old models

Chassis parts

	Transmission belt	Lower cutter deck belt		Upper cutter deck belt		Blower belt	
	Reference	Reference	Cutter plate	Reference	Cutter plate	Reference	Bag type
H1011	76184-772-003	76181-772-L02					
H1011H	76184-772-701	76181-772-L02					
H1011HK1	76184-772-701	76181-772-L02					
H1011K1	76184-772-003	76181-772-L02					
H2013HK1	22431-771-700					81516-771-P21	SG2038
H2013K1/K2	22431-771-003					81516-771-P21	SG2038
H3009	76182-751-023	76181-763-A02					
H3011	76182-751-023	76181-763-A02					
H4013SF		76181-758-L00					
H4514H		76181-758-L00 76181-758-N01	CD4538SB CD4542SB	76182-758-L01 76182-758-H00	CD4538SB CD4542SB	81516-758-R21	SG4000
HT3810		76181-750-013		76182-750-003			
HT3813		76181-750-013		76182-750-003			
HT3813K1		76181-750-A01		76182-750-003		81516-750-L21	SB3813
HT-R3009	76182-751-023	76181-751-003					
HT-R3811	76182-751-023	76181-751-701					

(Subject to stock availability)

	Blade (3-blade cutter plate)		Right blade (cutter plate 2 blades)		Left blade (cutter plate 2 blades)		Blade (1-blade cutter plate)	
	Reference	Cutter plate	Reference	Cutter plate	Reference	Cutter plate	Reference	Type
H1011							72511-772-L00	
H1011H							72511-772-630	
H1011HK1							72511-772-P20	
H2013HK1			72511-771-L20		72531-771-L20			
H2013K1/K2			72511-771-L20		72531-771-L20			
H3009							72511-763-A00	
H3011H							72511-763-A30	HSF
H4013SF	72513-758-N21		72511-758-M20	SF: CD4038B	72531-758-L00	SF: CD4038B		
H4514H	72513-758-N21	CD4542	72511-758-L21 72511-758-L00	CD4538 CD4538C	72531-758-L00			
HT3810			72512-750-305		72513-750-640			
HT3813			72512-750-305		72513-750-305			
HT3813K1			72511-758-L00		72531-758-L00			
HT-R3811			72512-751-700		72513-751-700			

(Subject to stock availability)

This sign tells you to be careful during certain operations, notably concerning the blade tightening torque. Please refer to the safety instructions in the machine's user manual.

Accessories

Saw blade kit	
	Reference
UMK425E1/E2 LE	06811 VL6 505*
UMK425E1/E2 UE	
UMK435E1/E2/E3 LE	
UMK435E1/E2/E3 UE	
UMK435 UE/UE3	06811-VK5-000HE

*Available only for models E LE

Hedgetrimmer	
	Reference
UMK425E1/E2	06260-VL6-000HE*
UMK435E1/E2/E3	

*Available only for models E LE

Pruner head	
	Reference
UMK425E1/E2	06250-VL6-000HE*
UMK435E1/E2/E3	

*Available only for models E LE

Comfort harness
Reference
68150-VL6-P32

Nylon wire in blister pack			
Reference	Diameter	Length	Packaging
72511-VF9-W12WX	2.7 mm	12 m	Pack of 12 coils
72511-VF9-S12SL			
72511-VF9-W15WX	2.4 mm	15 m	
72511-VF9-S15SL			

Fuel and maintenance

Rapidon 6 fuel can	
Reference	Packaging
01296-RAP-505	Pack of 5
01296-RAP-DIS	Pack of 15 + display box

❶ ❷

Brushcutter maintenance		
Description	Reference	Packaging
4 stroke oil 10W30 - SJ SH	❶ 08221-888-010MP	25 0.1 l sachets
Anti-wear grease	❷ 06899-VF9-010HE	1 cartridge of 400g
	❷ 06899-VF9-010HEMP	12 cartridges of 400g

❶ ❷

PRO Honda fuel stabiliser and carburettor cleaner		
Description	Reference	Packaging
Fuel Stabiliser	❶ 08CXZ-FSC-250	12 bottles of 240 ml
Carburettor Cleaner	❷ 08CAD-CCL-400	12 aerosols of 400 ml

(Subject to stock availability)

This sign tells you to be careful during certain operations. Please refer to the safety instructions in the machine user manual.

Brushcutters and other handheld equipment

Our complete nylon wire range

Our high-quality wire ranges for all Honda brushcutters:

The SILENT Twisted Wire Line

The SL range

Due to its spiral shape, the SL twisted nylon line works silently: noise and vibrations are reduced. Its structure allows not only better air penetration but also better cutting efficiency.

The HIGH STRENGTH Angular Wire Line

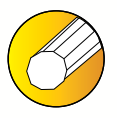

The WX range

With 10 outside edges and 5 inside edges, the WX angular nylon line has a unique structure designed to increase cutting efficiency and giving it superior strength.

The ROUNDWIRE Line

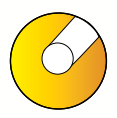

The RL range

The original nylon line is an economical solution for unbeatable cutting comfort.

Diameter	Length	Ref. The SL range: the SILENT line	Ref. The WX range: the HIGH STRENGTH line	Ref. The RL line: the ROUND line	Packaging
1, 6 mm	105 m		72511-VF9-105WX		Blister
2, 0 mm	65 m	72511-VF9-065SL	72511-VF9-065WX		Blister
2, 4 mm	12 x 15 m	72511-VF9-S15SL	72511-VF9-W15WX		Blister of 12 units
	25 strands of 39cm	72511-VJ5-C15SL			Individual strands (suitable for use on UMS425E)
	45 m	72511-VF9-045SL	72511-VF9-045WX	72511-VF9-045RL	Blister
	90 m	72511-VF9-090SL	72511-VF9-090WX	72511-VF9-090RL	Blister
	180 m	72511-VF9-180SL	72511-VF9-180WX		Coil in blister pack
	360 m	72511-VF9-360SL	72511-VF9-360WX		Coil in blister pack
2, 7 mm	12 X 12 m	72511-VF9-S12SL	72511-VF9-W12WX		Blister of 12 units
	35 m	72511-VF9-035SL	72511-VF9-035WX		Blister
	70 m	72511-VF9-070SL	72511-VF9-070WX		Blister

(Subject to stock availability)

RL and SL ranges

Blister

Individual strands

This sign tells you to be careful during certain operations. Please refer to the safety instructions in the machine user manual.

Brushcutters and other handheld equipment

Our complete nylon wire range

TRY IT!

Individual blister in display box of 12.
Available in 2.4 and 2.7 mm diameters.
Can be easily integrated into your existing lines!

Diameter	Length	Ref. The SL range: the SILENT line	Ref. The WX range: the HIGH STRENGTH line	Ref. The RL line: the ROUND line	Packaging
2.7 mm	140 m	72511-VF9-140SL	72511-VF9-140WX		Coil in blister pack
	280 m		72511-VF9-280WX		Coil in blister pack
3.0 mm	30 m	72511-VF9-030SL	72511-VF9-030WX	72511-VF9-030RL	Blister
	60 m	72511-VF9-060SL	72511-VF9-060WX	72511-VF9-060RL	Coil in blister pack
	120 m	72511-VF9-120SL	72511-VF9-120WX		Coil in blister pack
	240 m	72511-VF9-240SL	72511-VF9-240WX		Coil in blister pack
3.3 mm	25 m	72511-VF9-025SL	72511-VF9-025WX	72511-VF9-025RL	Blister
	50 m	72511-VF9-050SL	72511-VF9-050WX	72511-VF9-050RL	Blister
	100 m		72511-VF9-100WX		Coil in blister pack
	200 m		72511-VF9-200WX		Coil in blister pack

(Subject to stock availability)

RL and SL ranges

Blister

Individual strands

This sign tells you to be careful during certain operations. Please refer to the safety instructions in the machine user manual.

Brushcutters and other handheld equipment

Personal equipment and harnesses

INDISPENSABLE!

Equip your customers with high-quality ergonomic accessories for working in complete safety.

	Harness support hook	Comfort harness	Double harness	Single harness
	Reference	Reference	Reference	Reference
UMK422LT				68150-VF9-G13
UMK422LT4			68150-VF9-G33	
UMK422UT4			68150-VF9-G33	
UMK425ELE/L3E				68150-VF9-G13
UMK425EUE	24221-VJ5-000HE	68150-VJ5-C00HE	68150-VJ5-C10HE	
UMK425EU3E	24221-VJ5-000HE	68150-VJ5-C00HE	68150-VJ5-C10HE	
UMK425E1/E2	50370-VL6-P31	68150-VL6-P32		
UMK431LT				68150-VF9-G13
UMK431LT4			68150-VF9-G33	
UMK431UT4			68150-VF9-G33	
UMK431ELE				68150-VF9-G13
UMK431EL3E	24221-VJ5-000HE	68150-VJ5-C00HE	68150-VJ5-C10HE	
UMK431EUE	24221-VJ5-000HE	68150-VJ5-C00HE	68150-VJ5-C10HE	
UMK431EU3E	24221-VJ5-000HE	68150-VJ5-C00HE	68150-VJ5-C10HE	
UMK435ELE/L3E				68150-VF9-G13
UMK435EUE	24221-VJ5-000HE	68150-VJ5-C00HE	68150-VJ5-C10HE	
UMK435EU3E	24221-VJ5-000HE	68150-VJ5-C00HE	68150-VJ5-C10HE	
UMK435E1/E2/E3	50370-VL6-H31	68150-VL6-P32		
UMS425ELE	24221-VJ5-000HE			68150-VF9-G13
UMR431LT4			68150-VG7-B11	
UMR425E			68158-VJ6-023	

(Subject to stock availability)

Gloves	Elastic protective goggles	Protective glasses	Plastic visor	Mosquito visor	Mixed plastic/ mosquito visor
AL9959910	60156-VF9-013	60156-VJ3-681	60157-VF9-C00PX	60157-VF9-C00GX	60157-VF9-C00PG

Brushcutters and other handheld equipment

Cutting tools

New

Discover our pruner head which transforms your brushcutter into a real pruner capable of cutting branches from the soil.

The varied range of accessories for Honda brushcutters make them a complete and indispensable tool for all garden work.

The pruner head for Honda brushcutters: an ideal alternative for cutting branches at height in perfect comfort.

	3-tooth blade and fixing kit	3-tooth blade 250 mm	3-tooth blade 255 mm	4-tooth blade 230mm	80-tooth saw blade 255 mm
	Reference	Reference	Reference	Reference	Reference
UMK422LT4E				72511-VF9-E32	
UMK422UT4E				72511-VF9-E32	
UMK422K1 LE/LEB				72511-VF9-E32	
UMK425E	06811-VJ5-000HE	72511-VJ5-000HE			
UMK425E1/E2			72511-VL6-P31		
UMK431LT4E				72511-VF9-E32	
UMK431UT4				72511-VF9-E32	
UMK431E	06811-VJ5-000HE	72511-VJ5-000HE			
UMK431K1 LE/LEB				72511-VF9-E32	
UMK435E LE/L3E		72511-VJ5-000HE			80018-VK5-003
UMK435E UE/U3E					80018-VK5-003
UMK435E1/E2/E3			72511-VL6-P31		
UMR425E				72511-VF9-E32	
UMR431LT4				72511-VF9-E32	
UMR435			72511-VK9-L01		
UMR435E LE/L3E					80018-VK5-003

(Subject to stock availability)

Every tool has its own use:

- **3-tooth blade:** ideal for cutting spiny hedges and thick scrub.
- **4-tooth blade:** recommended for mowing large grassy areas.
- **80-tooth blade:** suitable for mowing high, dry grass (e.g. reeds).

This sign tells you to be careful during certain operations. Please refer to the safety instructions in the machine user manual.

Saw blade kit

	Reference
UMK425E LE UMK425E UE UMK435E LE UMK435E UE	06811-VL6-505
UMK435 UE/UE3	06811-VK5-000HE

Hedgetrimmers

	Hedgetrimmer	Blade assembly ❶	Blade ❷	Guide ❸	Spacer ❹
	Reference	Reference	Reference	Reference	Reference
UMK425E1/E2	06260-VL6-000HE*	06711-VL6-003HE	72511-VL6-003HE	72512-VL6-003HE	72562-VL6-003HE

*Available only for models E LE

New

Pruner head

	Pruner head	Chain	Chain guide
	Reference	Reference	Reference
UMK425E1/E2 UMK435E1/E2/E3	06250-VL6-000HE*	72511-VL6-013HE	72513-VL6-013HE

*Available only for models E LE

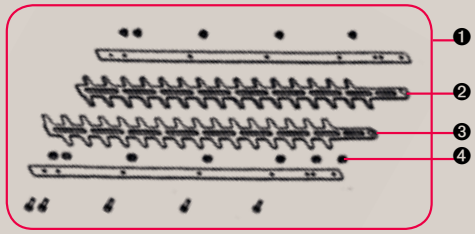

Brushcutters and other handheld equipment

Cutting tools

- **The nylon head** is particularly suitable for cleaning large areas.
- **The Tap & Go head** allows semi-automatic unreeling of the wire by simply pressing the head on the ground.
- **The quick nylon head** offers a simple, effective system: just replace the worn out spools.

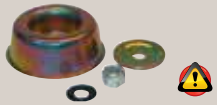

	Quick nylon head	Manual nylon head	Tap & Go nylon head	Blade protector	Blade fixing kit bolt/nut	Blade unit with disc and bearing
	Reference	Reference	Reference	Reference	Reference	Reference
UMK422/K1		72560-VF9-C12	72560-VF9-C41EX	72534-VF9-003		
UMK425E LE			06725-VJ5-305	80099-VJ5-003	06812-VJ5-000HE	
UMK425E L3E			06725-VJ5-305	80099-VJ5-003		
UMK425E UE			06725-VJ5-305	80099-VJ5-003	06812-VJ5-000HE	
UMK425E1/E2			72560-VL1-631	72534-VJ3-681		
UMK431LT4E			72560-VF9-C41EX	72534-VF9-003		
UMK431E			06725-VJ5-305	80099-VJ5-003	06812-VJ5-000HE	
UMK431UT4E		72560-VF9-C12	72560-VF9-C41EX	72534-VF9-003		
UMK431E LE			06725-VJ5-305	80099-VJ5-003	06812-VJ5-000HE	
UMK431E L3E			06725-VJ5-305	80099-VJ5-003		
UMK431E UE			06725-VJ5-305	80099-VJ5-003	06812-VJ5-000HE	
UMK431E U3E			06725-VJ5-305	80099-VJ5-003		
UMK431K1		72560-VF9-C12	72560-VF9-C41EX	72534-VF9-003		
UMK435E LE/L3E			06725-VJ5-305	80099-VJ5-003		
UMK435E UE/U3E			06725-VJ5-305	80099-VJ5-003		
UMR425E			72560-VL6-631	72534-VJ3-681		
UMR431LT4		72560-VF9-C12	72560-VF9-C41EX	72534-VF9-003		72500-VF9-B31
UMS425E	72560-VJ5-C10HE					
UMS425E1			72560-VL6-R11			

(Subject to stock availability)

Eyelet	
	Reference
UMK425E/E1/E2 UMK435E/E1/E2/E3 UMK435T	72562-VL6-P31

This sign tells you to be careful during certain operations. Please refer to the safety instructions in the machine user manual.

Brushcutters and other handheld equipment

Engine parts

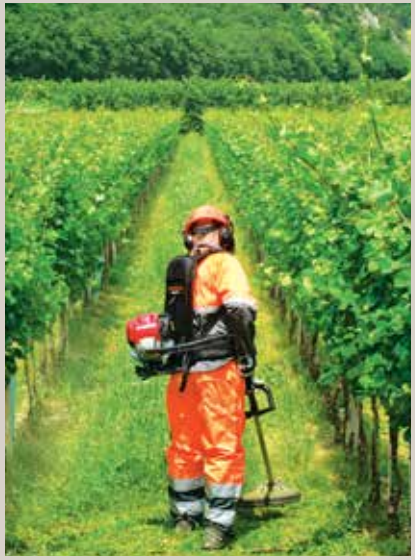

	NGK spark plug		Nippon Denso spark plug		Air filter	Starter
	Reference	Info	Reference	Info	Reference	Reference
UMK422K1	98056-55757 X10	CR5HSB	98056-55757	U16FSR-UB	17211-ZM3-000	28400-ZM3-J81ZA
UMK425E/E1	31915-Z0H-003	CMR5H			17211-Z0H-000	28400-Z0H-003
UMK431E			98056-55757	U16FSR-UB	17211-ZM3-000	28400-ZM3-J81ZA
UMK431K1			98056-55757	U16FSR-UB	17211-ZM3-000	28400-ZM3-J81ZA
UMK435E/E1	31915-Z0H-003	CMR5H			17211-Z0Z-000	28400-Z0Z-003
UMK435E2	31915-Z0H-003	CMR5H				
UMR425E	31915-Z0H-003	CMR5H			17211-Z0H-000	28400-Z0H-003
UMR435	31915-Z0H-003				17211-Z0Z-000	28400-Z0Z-003
UMS425E/E1	31915-Z0H-003	CMR5H			17211-Z0H-000	28400-Z0H-003

(Subject to stock availability)

X10 Note: this reference is packaged in units of 10.

Brushcutters and other handheld equipment

Chassis parts

	Wiring loom		Angle transmission		Transmission shaft		Clutch		Outer clutch		Engine starter switch	Throttle cable	RotoStop cable	
	Reference	Type	Reference	Type	Reference	Type	Reference	Type	Reference	Type	Reference	Reference	Reference	Type
UMK422/K1	32100-VF9-V31 32100-VF9-V41	UE LE/LTE	41100-VL1-631 41100-VL1-633	LTE UT4E/LT4E/UE/LE	41411-VF9-V31		22000-ZM3-003		22100-VF9-A00		Complete wiring loom	Complete wiring loom		
UMK425E	80112-VJ5-013 80113-VJ5-003	LE/L3E UE/U3E	80088-VJ5-013		80110-VJ5-003		22000-ZM3-003		80077-VJ5-003		80046-VJ5-013	Complete wiring loom		
UMK431E	80112-VJ5-013 80113-VJ5-003	LE/L3E UE/U3E	80088-VJ5-013		80110-VJ5-003		22000-ZM5-003		22100-VF9-700	LTE/LT4E/ UT4E	80046-VJ5-013	Complete wiring loom		
UMK431K1	32100-VF9-V31 32100-VF9-V41	UE LE/LTE	41100-VL1-013	LT4E/UT4E/LE/UE/ UEB/LEB	41411-VF9-700 41411-VF9-B00	LE/LT4E/UE/UT4E LEB/UEB	22000-ZM5-003	LE/UE LEB/UEB	22100-VF9-700 22100-ZM5-K50	LE LEB/UEB	Complete wiring loom	Complete wiring loom	47620-VF9-W30 47620-VF9-W40	UEB LEB
UMK435E	80112-VJ5-013		80015-VK5-013		80110-VJ5-003		80020-VK5-003		80078-VJ5-003		80046-VJ5-013			
UMR425E	32100-VJ6-P41		41101-VL1-632		41411-VJ6-P41 41470-VJ6-P41	Rigid shaft Flexible	22000-ZM3-003		22100-VJ6-003		Complete wiring loom	Complete wiring loom		
UMR435	32100-VL5-G41		41100-VL5-G41		41411-VL5-A10 41470-VL5-A11	Rigid shaft Flexible	22260-VL5-A10		22100-VL5-A10			Complete wiring loom		
UMS425E	80112-VJ5-013				80093-VJ5-003		22000-ZM3-003		80077-VJ5-003		80046-VJ5-013	Complete wiring loom		

(Subject to stock availability)

	Angle transmission	Transmission shaft	Clutch	Housing clutch		Lever assy throttle *	
	Reference	Reference	Reference	Reference	Info	Reference	Type
UMK425E1/E2	41100-VL6-P32	41411-VL1-631	22000-ZM3-003	22260-VL6-P31	See GIT2	17850-VL6-P41 17850-VL6-P31	LEET UEET
UMK435E1	41100-VL6-H32	41411-VK4-M01	22000-Z0Z-003	22260-VL6-H31	See GIT2	17850-VL6-H41	
UMK435E2/E3	41100-VL6-J31	41411-VK4-M01	22000-Z0Z-003	22260-VL6-H31	See GIT2	17850-VL6-H41	
UMS425E1	41475-VL6-R11	41471-VL6-R11	22000-ZM3-003	22260-VL6-R11	See GIT2	17850-VL6-P41	

(Subject to stock availability)

*Includes: wiring loom, engine starter cable and gas control

Handheld equipment

Multifunction tools

	NGK spark plug		Air filter	Fuel filter	Recoil starter
	Reference	Info	Reference	Reference	Reference
UMC425E	31915-Z0H-003	CMR5H	17211-Z0H-000	17672-Z0H-003	28400-Z3E-M01
UMC435E	31915-Z0H-003	CMR5H	17211-Z0Z-000	17672-Z0H-003	28400-Z3F-M01

(Subject to stock availability)

Multitool - Versatool spare parts and accessories									
Brushcutter - SSBC ❶			Cultivator - SSCL ❷		Hedgetrimmer - SSHH ❸			Pruner - SSPP ❹	
Nylon wire	Nylon head	3-tooth blade kit	Cultivator blade		Blade assembly		Blade cover	Chain	Chain guide
Reference	Reference	Reference	Reference	Characteristics	Reference	Characteristics	Reference	Reference	Reference
72511-VF9-045RL	72560-VL6-P31	06811-VP8-506	72461-VP8-000HE	per unit	06711-VP8-000HE 06711-VL6-003HE	SE*: 50 cm LE*: 54 cm	76247-VP8-010HE	72511-VL6-013HE	72513-VL6-013HE

* Note: angle is 90° for SE and 50° for LE 50°

This sign tells you to be careful during certain operations. Please refer to the safety instructions in the machine user manual.

Handheld equipment

Hedgetrimmers

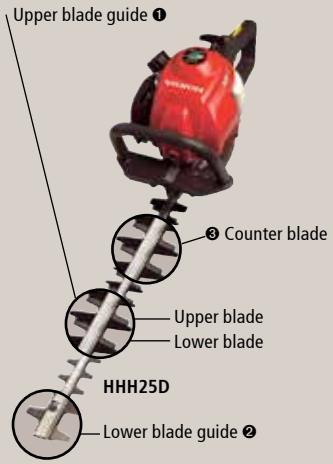

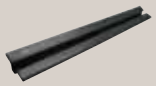

	NGK spark plug		Air filter	Fuel filter	Recoil starter	Blade		Blade cover
	Reference	Info	Reference	Reference	Reference	Reference	Characteristics	Reference
HHH25D60	31915-Z0H-003	CMR5H	17211-Z0H-000	17672-Z0H-003	28400-Z0H-J72	72511-VJ8-C11	16 tooth double blade 60cm	72534-VJ8-C11
HHH25D75	31915-Z0H-003	CMR5H	17211-Z0H-000	17672-Z0H-003	28400-Z0H-J72	72511-VJ8-C21	16 tooth double blade 75 cm	72534-VJ8-C01
HHH25S	31915-Z0H-003	CMR5H	17211-Z0H-000	17672-Z0H-003	28400-Z0H-J72	72512-VJ8-C01 72513-VJ8-C01	Upper 21-tooth blade Lower 20-tooth blade	72534-VJ8-C01

	❶ Upper blade guide	❷ Lower blade guide	❸ Counter blade	Guide + blade kit
	Reference	Reference	Reference	Reference
HHH25D60	72526-VJ8-C11	72528-VJ8-C11	72527-VJ8-C11	72500-VJ8-C11
HHH25D75	72526-VJ8-C22	72528-VJ8-C21	72527-VJ8-C21	72500-VJ8-C21
HHH25S	72526-VJ8-C01	72528-VJ8-C01	72527-VJ8-C01	72500-VJ8-C01

(Subject to stock availability)

Sprayers

➔ Treat your plants and shrubs with the Honda sprayer.

	NGK spark plug		Air filter	Fuel filter	Recoil starter	Clutch	Flexible	Nozzle	Harness
	Reference	Info	Reference	Reference	Reference	Reference	Reference	Reference	Reference
WJR1525	31914-Z0H-003	CMR 4H	17211-Z0H-000	17672-Z0H-003	28400-Z0H-003	22000-ZM3-003	80178-YG9-003	80142-YG9-003	80175-YG9-013
WJR 2525	31914-Z0H-003	CMR 4H	17211-Z0H-000	17672-Z0H-003	28400-Z0H-003	22000-ZM3-003	80178-YG9-003	80037-YG9-003	80084-YG9-003

(Subject to stock availability)

This sign tells you to be careful during certain operations. Please refer to the safety instructions in the machine user manual.

Accessories

❶

❷

De-thatcher Kit and Aerator Kit

	FG110	FG200/FG201	FG205	F210/F220	F501/F506/F560/FJ500
De-thatcher	❶ 01110-900-213FM	06729-799-003	06729-V18-003HE	06729-V14-003HE	01501-900-013FM
Aerator	❷ 06727-V25-000	06727-799-003		06727-V14-003HE	06727-V14-003HE
COMPLETE KIT (Includes de-thatcher, aerator and border edger)		06724-799-003			

(Subject to stock availability)

❸

❹

Honda wheel weights, counterweights and supports

Description	Reference
Wheel weights 5x10 (32 kg)	06591-925-000HE
Wheel weights 6x12 (44 kg)	06591-940-000HE
Wheel weights 6.5x15 (50 kg)	06591-950-000HE
Front counterweight (23 kg)	06590-925-000HE
Front counterweight (34 kg)	06590-940-000HE
Front weight support (32 kg)	06821-925-000HE

(Subject to stock availability)

Tilling and ploughing tools

Description	Model	Reference	Cutter Ø	Working width
❸ Standard rotary tools 115 6 tines with plant protection disc	For F360/F501/FJ500/F506/F560*	06726-734-003HE	305	0.65 m
❸ Standard rotary tools 135 6 tines with plant protection disc	For F360/F501/FJ500/F506/F560*	06726-732-003HE	320	0.80 m
❹ Rotary ploughing tools 138 6 tines and discs with plant protector	For F506/F560*	06726-730-003HE	310	0.90 m

(Subject to stock availability)

* If you cannot find your model, please refer to the tiller model equivalence table

❶

❷

❸

Transport and travel wheels

Description	Model	Reference
❶ Pair of transport wheels for rotary tools (Ø 350)	For F360/F501/FJ500/F506/F560*	01321-928-023FM
❷ Front transport wheel	For F360/F501/FJ500/F506/F560 /F660/F720/F810*	06730-926-000HE
❸ Pair of wheels - Stabilarge profile 5.0 x 10	For F506/F560*	42700-925-000HE
6.0 x 12	For F720*	42700-940-000HE
6.5 x 15	For F810*	42700-950-000HE

(Subject to stock availability)

* If you cannot find your model, please refer to the tiller model equivalence table

Pair of Snow wheels

Description	Reference
Wheel 3.5 x 5 and weight 2 x 10 kg kit	44710-005-K10SH
Pair of wide AS wheels 16 x 6.5 kg	44710-008-K14SH
Pair of wide AS wheels 16 x 6.5 kg	44710-008-K14SH
Pair of wide AS wheels 16 x 6.5 kg	44710-008-K14SH

(Subject to stock availability)

Tillers

Maintenance

- Maintain your equipment using our range of specific maintenance oils and products!

- Honda transmission oil has been specifically designed for Honda FG201/205 minitillers. We strongly recommend its use for perfect maintenance.

Transmission oil		
Model	Reference	Pack.
FG201	08208-V18-211HE	80 cc
FG205	08208-V18-205HE	

(Subject to stock availability)

Maintenance of tillers				
Description	Reference	Packaging	Multipack Reference	Packaging
4 stroke oil 10W30 - SJ SH	❶ 08221-888-101HE	1l bottle	08221-888-101MP	24 1l bottles
	❷ 08221-888-061HE	0.6-liter can	08221-888-061MP	24 0.6l cans
Hydrostatic oil (HST)	❸ 08208-999-02HE	1l bottle		

(Subject to stock availability)

PRO Honda fuel stabiliser and carburettor cleaner		
Description	Reference	Packaging
Fuel Stabiliser	❶ 08CXZ-FSC-250	12 bottles of 240 ml
Carburettor Cleaner	❷ 08CAD-CCL-400	12 aerosols of 400 ml

(Subject to stock availability)

Rapidon 6 fuel can	
Reference	Packaging
01296-RAP-505	Pack of 5
01296-RAP-DIS	Pack of 15 + display box

(Subject to stock availability)

Accessories

The tiller accessories presented in this catalogue have been approved in accordance with the Machinery Directive. The installation of any other equipment on a Honda tiller makes you responsible as manufacturer of the equipment and its accessory.

Honda tillers are versatile and their complementary accessories allow them to be used throughout the year. So, depending on the engine, a single model can drive a rotary cutter, a border edger, an aerator, a de-thatcher, or a shredder tool.

- **The standard rotary tool (cutter kit)** gives the soil a suitable consistency for plant growth. The number of blades varies according to the work and the power of the machine.
- **The shredder kit** prepares and refines the soil by breaking up the clumps of earth.
- **The ridger** is a plough fitted with two ears that can be adjusted depending on the amount of space between the rows of plants. Passing between these rows, the ridger makes a furrow and deposits the soil at the foot of the plants on each side.
- **An adjustable transport wheel** can be fitted to the front of the tiller to facilitate transport and increase manoeuverability.

- **The complete Kit:** This versatile kit combines three indispensable accessories to aerate the soil, eliminate moss and manage the ground.
- ❶ **De-thatcher:** An abundance of moss can smother your lawn and tends to turn it yellow. The de-thatcher rakes and clears your lawn without damaging it.
- ❷ **Aerator:** Aerating the soil allows healthy growth of the lawn. The whole area must be worked twice at right angles.
- ❸ **Border Edger:** This tool is useful for cutting borders and allows portions of turf to be cut and collected for new arrangements.

	Complete kit: De-thatcher + Aerator + Border Edger		De-thatcher		Aerator		Border Edger
	Reference	Info	Reference	Width	Reference	Working width	Reference
FG110			01110-900-013FM		06727-V25-000		06728-V25-000
FG200	06724-799-003	❶ De-thatcher: 06729-799-003, ❷ Aerator: 06727-799-003 ❸ and Border Edger: 06728-799-003	06729-799-003	45 cm	06727-799-003	0.25 m	06728-799-003
FG201	06724-799-003	De-thatcher: 06729-799-003, Aerator: 06727-799-003 and Border Edger: 06728-799-003	06729-799-003	45 cm	06727-799-003	0.25 m	06728-799-003
FG205			06729-V18-003HE				
F210/F220			06729-V14-003HE		06727-V14-003HE	0.58 m	

(Subject to stock availability)

	Standard rotary tool		Rotary ploughing tool	Shredder kit		Ridger		Transport wheel
	Reference	Info	Reference	Reference	Characteristics	Reference	Width	Reference
FG110	06230-V25-505	72462-V25-010 Outside Right 72470-V25-010 Inside Right 72466-V25-010 Outside Left 72475-V25-010 Inside Left		06726-V25-010				
FG200				06726-799-003	Rotary cutter with 4 tines, 10 blades, for medium ground. Width 0.25m	72700-729-811 72710-729-810	Adjustable: 20/28cm 22 cm	
FG201	06230-V18-405	Rotary tool pack 72110-V18-640 (1 piece), 72130-V18-640 (1 piece), 72210-V18-640 (1 piece), 72230 V18 640 (1 piece), 90651-703-000 (2 pieces), 90757-782-000 (2 pieces)		06726-799-003	Rotary cutter with 4 tines, 10 blades, for medium ground. Width 0.25m	72700-729-811 72710-729-810	Adjustable: 20/28cm 22 cm	42710-V18-640
FG205	06230-V18-505	Pack of four 4-blade tines for medium ground with protective disc, width 0.45m				72700-729-811 72710-729-810	Adjustable: 20/28cm 22 cm	42710-V18-640
F200/ F210	06726-737-003HE		06726-738-003HE			72700-729-811	Adjustable: 20/28cm	Detail, see GIT2
F220	06721-729-305 06726-737-003HE	Honda Original Forges Des Margerides	06726-738-003HE			72700-729-811	Adjustable: 20/28cm	

(Subject to stock availability)

Tillers

Standard rotary tools

Honda tillers are versatile and their complementary accessories allow them to be used throughout the year.
The front and rear mounting devices can be used on all types of equipment.

TILLER MODEL EQUIVALENCE TABLE					
Equivalence F506/F560 (Index 1)		Equivalence F660/F720 (Index 2)		Equivalence F810 (Index 3)	
Shaft dia.	Drawbar dia.	Shaft dia.	Drawbar dia.	Shaft dia.	Drawbar dia.
23 mm	73 mm	26 mm	93 mm	34 mm	93 mm
FS28, F28, F300, F360, F400, F405, F410		F30, F40, F42, F50, FS50, F600		F800, F810	
F450, F460, F501, F506, F510, F560, FJ500		F610, F660, F700, F720			

The standard rotary tool:

This versatile tool is the basic tool for the tiller. When used in combination with the drag bar at the rear of the tiller, it can be used to dig, till, cultivate, weed, fertilise and refine the soil. Depending on the desired working width and the type of engine, 4 to 8 tines of 4 blades each can be fitted. A plant protection disc can be fitted at each end and can be removed for deep tilling.

STANDARD ROTARY TOOLS							
	Rotary tools 105 4 0.58m tines with discs	Extensions for tools 105 2 additional tines	Rotary tools 115 6 0.65m tines with discs	Rotary tools 135 6 0.80 m tines with discs	Rotary tools 116 6 0.75 m tines with discs	Rotary tools 117 8 0.85m tines m with discs	Rotary tools 107 8 1.10m tines with discs
F360/F501/FJ500(1)	06726-V33-003HE	01105-926-013FM	06726-734-003HE	06726-732-003HE			
F506 (1)	06726-V33-003HE	01105-926-013FM	06726-734-003HE	06726-732-003HE			
F560 (1)			06726-734-003HE	06726-732-003HE			
F660/720 (2)					06726-735-003HE	06726-727-003HE	
F810 (3)							06726-765-003HE

(1), (2), (3)* If you cannot find your model, please refer to the tiller model equivalence table (Subject to stock availability)

Special rotary tools

Rotary ploughing and farming tools:

The rotary farming tool uses specially curved blades to cut up the roots. There are 6 of these blades on a standard tine or 8 on double tines. The tool is equipped with plant protection discs, which also limit the working depth.

PLOUGHING AND FARMING ROTARY TOOLS					
	Ploughing tools 118 4 tines and discs 0.65m working width	Ploughing tools 138 6 tines and discs 0.90 m working width	Ploughing tools 128 6 tines and discs 0.90 m working width	Farming tools 104 2 tines and discs 0.28 m working width	Farming tools 119 2 tines and discs 0.25 m working width
F210/220/260				06726-V14-003HE	
F360/501/FJ500 (1)	06726-729-003HE				06726-733-003HE
F506 (1)	06726-729-003HE	06726-730-003HE			06726-733-003HE
F560 (1)	06726-729-003HE	06726-730-003HE			06726-733-003HE
F660/F720 (2)			06726-766-003HE		

(1), (2), (3)* If you cannot find your model, please refer to the tiller model equivalence table (Subject to stock availability)

Rotary tool spare parts

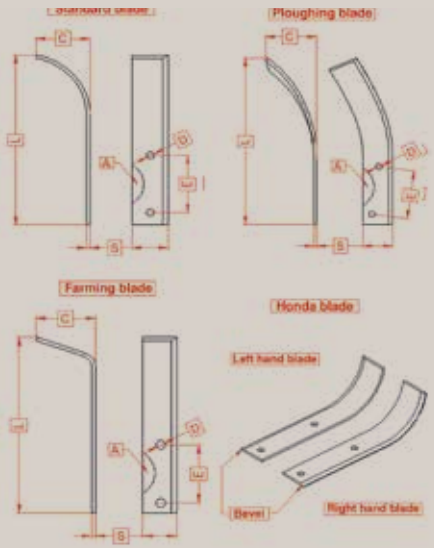

IDENTIFICATION TABLE OF HONDA BLADES

Tool type	Blade reference	Designation	Cutter dia. in mm	Section S in mm	Length L in mm	Camber C in mm	Centre distance E in mm	Hole dia. D in mm	Notch A	Complete tool reference
Standard	01115-010-FM13 01115-011-FM13	Starting std blade ES115 R/H Starting std blade ES115 L/H	305	30x3.5 double bevel	190	50	70	8.5	Yes	06726-734-003HE: F560
	01115-008-FM13 01115-009-FM13	Addit. std blade ES115 R/H Addit. std blade ES115 L/H	305	30x3.5 double bevel	190	70	70	8.5	Yes	
	01135-010-FM13 01135-011-FM13	Starting std blade ES135 R/H Starting std blade ES135 L/H	320	40x3.5 double bevel	208	60	90	8.5	No	06726-732-003HE: F560
	01135-008-FM13 01135-009-FM13	Addit. std blade ES135 R/H Addit. std blade ES135 L/H	320	40x3.5 double bevel	208	72	90	8.5	No	
	01107-982-013FM	Pair of blades ES107 (D&G)	380	45x4	236	60	90	10.5	No	06726-765-003HE: F810
	01117-003-FM13 01117-004-FM13	Addit. std blade ES117 R/H Addit. std blade ES117 L/H	360	30x5	230	50	90	8.5	No	06726-727-003HE: F720
	01117-006-FM13 01117-002-FM13	Starting std blade ES117 R/H Starting std blade ES117 L/H	360	30x5	230	68	90	8.5	No	
	01259-032-013FM 01259-031-013FM	Rear cutter R/H blade Rear cutter L/H blade	300	40x5	189	58	70	8.5	Yes	01261-960-013FM: F560 01259-960-013FM: F720 01260-960-013FM: F810
Ploughing	01138-008-FM13 01138-009-FM13	Ploughing blade 138 right Ploughing blade 138 left	310/320	40x3.5	205	69	70	8.5	Yes	06726-730-003HE: F560 06726-729-003HE: F560
	01128-002-013FM 01128-003-013FM	Ploughing blade 128 right Ploughing blade 128 left	360	45x4	242	68	90	10.5	No	06726-766-003HE: F720
Farming	01119-002-013FM 01119-003-013FM	Farming blade R/H EM119 Farming blade L/H EM119	300	30x3.5	172	53	40	8.5	Yes	06726-733-003HE: F560

(Subject to stock availability)

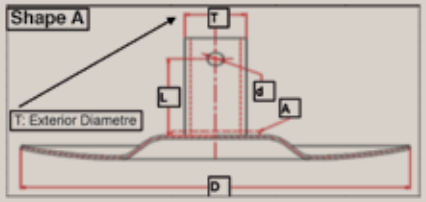

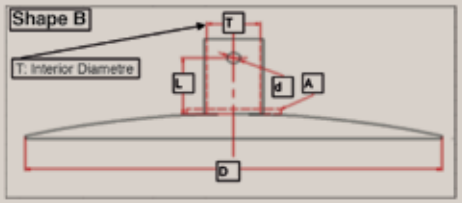

IDENTIFICATION TABLE OF HONDA DISCS

Tool type	Honda disc reference	Disc dia. D in mm	Tube dia. T in mm	Length L in mm	Hole dia. d in mm	Disc type	Reinforcement A	Characteristics
Standard	01115-005-FM13	202	30	30	10.5	A	No	For standard tools 115 (F560*)
	01135-005-FM13	275	30	35	10.5	A	Yes	For standard tools 135 (F560/F501/506) and 116 (F720/F660)
	01107-985-013FM	300	34	50	10.5	A	Yes	For standard tools 107 (F810)
	01117-009-FM13	275	28	56/42	10.5	A	Yes	For standard tools 117 (F720/F660)
Ploughing	01138-005-FM13	275	32	45	8.5	B	No	For ploughing tools 118/138 (F560/F501/506)
Farming	01119-005-013FM	202	23	24	8.5	A	No	For farming tools 119 (F560/F501/506)

(Subject to stock availability)

(F560*): F501 and also F506

Rotary tool spare parts

SPARE PARTS FOR HONDA ROTARY TOOLS												
Rotating tines		R/H starting tine	L/H starting tine	R/H additional tine	L/H additional tine	Plant protection disc	Pins		R/H additional standard blade	L/H additional standard blade	R/H starting standard blade	L/H starting standard blade
Tool type	Reference	Reference	Reference	Reference	Reference	Reference	Reference	Dimensions	Reference	Reference	Reference	Reference
Standard	❶ 06726-734-003HE	01115-001-FM13	01115-002-FM13	01115-003-FM13	01115-004-FM13	01115-005-FM13	01199G07X34FM 01199G10X38FM	07 x 34 10 x 38	01115-008-FM13	01115-009-FM13	01115-010-FM13	01115-011-FM13
	❷ 06726-727-003HE	01117-001-FM13	01117-005-FM13	01117-007-FM13	01117-008-FM13	01117-009-FM13	01199G08X38FM	08 x 38	01117-003-FM13	01117-004-FM13	01117-006-FM13	01117-002-FM13
	❸ 06726-732-003HE	01135-001-FM13	01135-002-FM13	01135-004-FM13	01135-003-FM13	01135-005-FM13	01199G07X34FM 1199G10X38FM	07 x 34 10 x 38	01135-008-FM13	01135-009-FM13	01135-010-FM13	01135-011-FM13
Ploughing	❹ 06726-729-003HE	01138-001-FM13	01138-002-FM13			01138-005-FM13	01199G07X34FM 01199G08X38FM	07 x 34 08 x 38			01138-008-FM13	01138-009-FM13
	❺ 06726-766-003HE	01128-001-013FM	01128-004-013FM	01128-006-013FM	01128-005-013FM				01128-002-013FM	01128-003-013FM	01128-002-013FM	01128-003-013FM
	❻ 06726-730-003HE	01138-001-FM13	01138-002-FM13	01138-003-FM13	01138-004-FM13	01138-005-FM13	01199G07X34FM 01199G08X38FM	07 x 34 08 x 38	01138-008-FM13	01138-009-FM13	01138-008-FM13	01138-009-FM13
Farming	❼ 06726-733-003HE	01119-001-013FM	01119-004-013FM			01119-005-013FM	01199G08X34FM	08 x 34		01119-003-013FM	01119-002-013FM	01119-003-013FM

(Subject to stock availability)

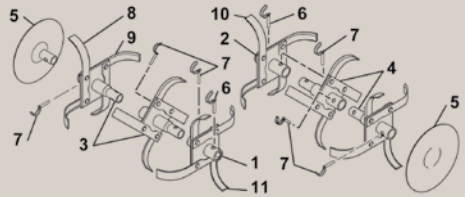

1- Standard tool 115: 06726-734-003HE
Hexagonal shaft 23mm

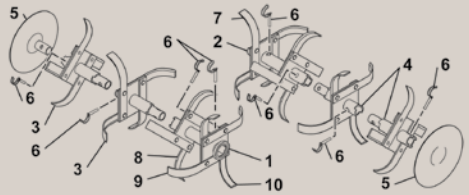

2- Standard tool 117: 06726-727-003HE
Hexagonal shaft 26 mm

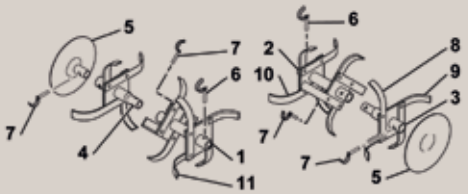

3- Standard tool 135: 06726-732-003HE
Hexagonal shaft 23mm

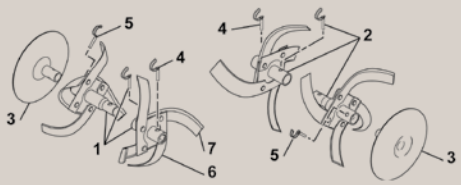

4- Ploughing tool 118: 06726-729-003HE
Hexagonal shaft 23mm

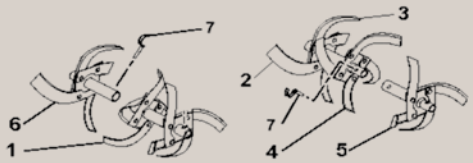

5- Ploughing tool 128: 06726-766-003HE
Hexagonal shaft 26 mm

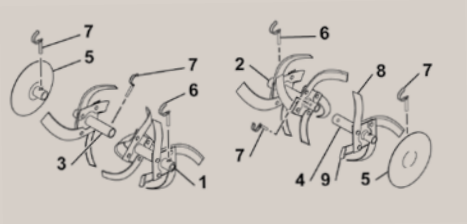

6- Ploughing tool 138: 06726-730-003HE
Hexagonal shaft 23 mm

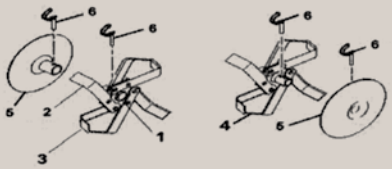

7 - Farming tool 119: 06726-733-003HE
Hexagonal shaft 26 mm

Rear cutter

The rear cutter is a rotary tool linked to the tiller equipped with wheels (identical for ploughing). Its high rotating speed allows very finely worked soil to be achieved.

Note: In accordance with Machinery Directive EN709, the rear cutters marketed by Honda as detailed below may be sold only as spare parts for the following models: F560K5, F720K1, F810K3.
The installation of these rear cutters on models higher than the aforementioned ones, makes you responsible as manufacturer of the equipment and its accessory.

Rear cutter only		
	Reference	Working width
F560 (1)	01261-960-013FM	0.60 m
F720 (2)	01259-960-013FM	0.67 m
F810 (3)	01260-960-013FM	0.685 m

(Subject to stock availability)

Combination with 23-kg weight

Our complete rear cutter kit includes: 1 rear cutter + 1 pair of wheels + wheel weights + 1 23-kg front counterweight

	Complete rear tool cutter	Rear cutter only	Working width	Pair of wheels - Stabilarge profile	Dimensions	Wheel weight	Weight	Front counterweight	Weight
	Reference	Reference		Reference		Reference		Reference	
F560	01250-COM-F560	01261-960-013FM	0.60 m	42700-925-000HE	5.0 x 10	06591-925-000HE	32 kg per unit	06590-925-000HE	23 kg without support
F720	01250-COM-F720	01259-960-013FM	0.67 m	42700-940-000HE	6.0 x 12	06591-940-000HE	44 kg per unit	06590-925-000HE	23 kg without support
F810	01250-COM-F810	01260-960-013FM	0.685 m	42700-950-000HE	6.5 x 15	06591-950-000HE	50 kg per unit	06590-925-000HE	23 kg without support

(Subject to stock availability)

Combination with 34-kg weight

Our complete rear cutter kit includes: 1 rear cutter + 1 pair of wheels + wheel weights + 1 34-kg front counterweight

	Complete rear tool cutter	Rear cutter only	Working width	Pair of wheels - Stabilarge profile	Dimensions	Wheel weight	Weight	Front counterweight	Weight
	Reference	Reference		Reference		Reference		Reference	
F560	01251-COM-F560	01261-960-013FM	0.60 m	42700-925-000HE	5.0 x 10	06591-925-000HE	32 kg per unit	06590-940-000HE	34 kg without support
F720	01251-COM-F720	01259-960-013FM	0.67 m	42700-940-000HE	6.0 x 12	06591-940-000HE	44 kg per unit	06590-940-000HE	34 kg without support
F810	01251-COM-F810	01260-960-013FM	0.685 m	42700-950-000HE	6.5 x 15	06591-950-000HE	50 kg per unit	06590-940-000HE	34 kg without support

All these kits include front weight support 06821-925-000HE

(Subject to stock availability)

Rear cutter

Rear cutter combination without wheel weights or counterweights
Our complete rear cutter kit includes: 1 rear cutter + 1 pair of wheels

	Complete rear tool cutter	Rear cutter only	Working width	Pair of wheels Stabilarge profile	Dimensions
F560	01252COMF560	01261-960-013FM	0.60 m	42700-925-000HE	5.0 x 10
F720	01252COMF720	01259-960-013FM	0.67 m	42700-940-000HE	6.0 x 12
F810	01252COMF810	01260-960-013FM	0.685 m	42700-950-000HE	6.5 x 15

(Subject to stock availability)

Rear cutter parts

Detail of rear cutter parts
01261-960-013FM - Tiller F560

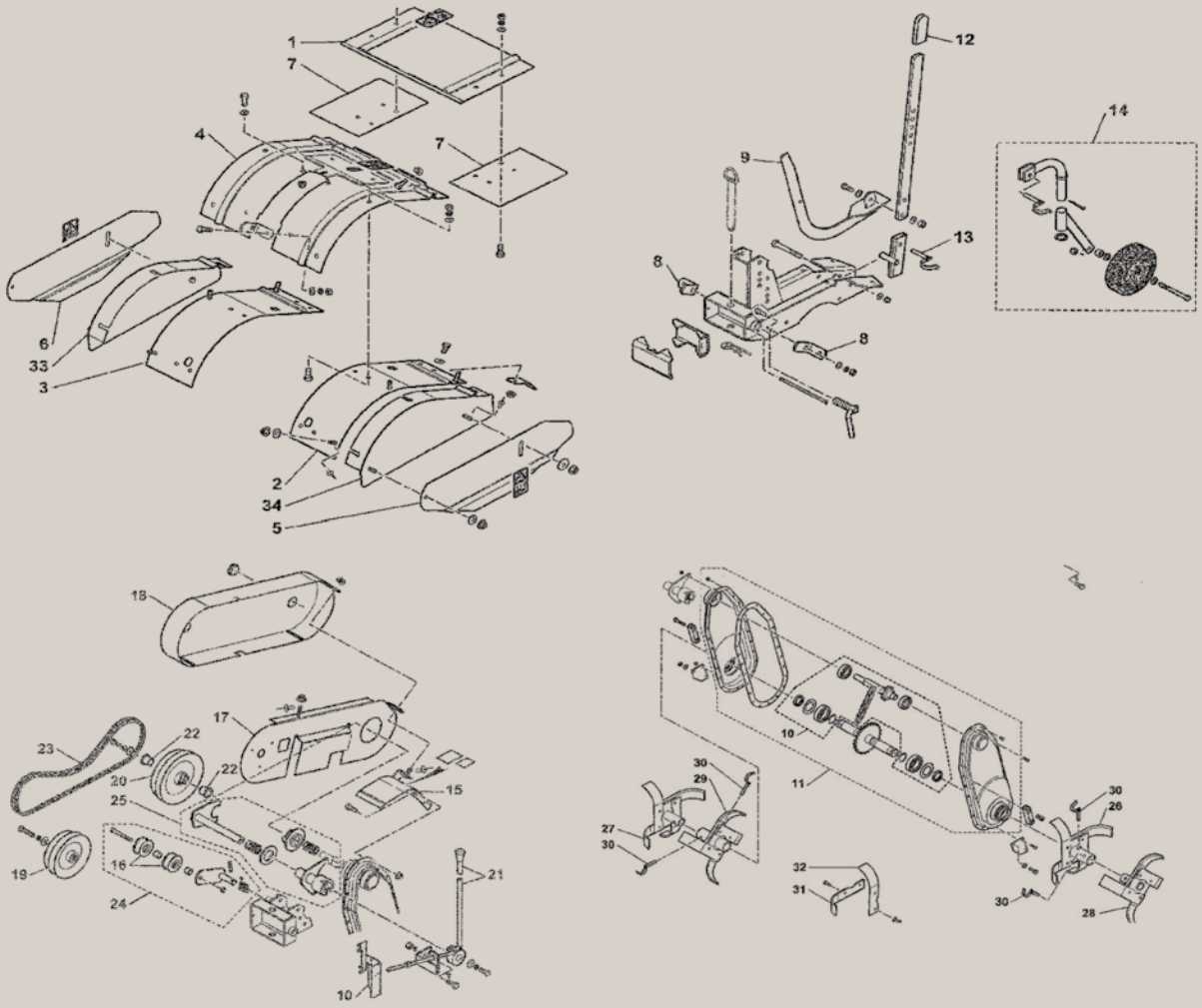

Id. No.	Reference	Description	Qty
1	01261-001-013FM	CENTRAL PART	1
2	01261-002-013FM	SIDE COVER, LEFT	1
3	01261-003-013FM	SIDE COVER, RIGHT	1
4	01261-004-013FM	CENTRAL COVER	1
5	01259-005-013FM	MOVING CHEEK, LEFT	1
6	01259-006-013FM	MOVING CHEEK, RIGHT	1
7	01261-007-013FM	SIDE PART	2
8	01261-008-013FM	COVER MOUNTING BRACKET	2
9	01259-033-013FM	SHOE	1
10	01261-010-013FM	CASING REBUILD KIT	1
11	01261-011-013FM	MOUNTED CASING	1
12	01259-012-013FM	PLASTIC SLEEVE	1
13	01199-G08-X34FM	PIN FM Ø8 x 34	1
14	122NO	REAR WHEEL, COMPLETE	1
15	01259-015-013FM	SAFETY COVER	1
16	01259-016-013FM	TENSIONER	2
17	01261-017-013FM	WATERPROOF COVER	1
18	01261-018-013FM	BELT COVER	1
19	01261-019-013FM	PTO PULLEY	1
20	01261-020-013FM	CLAW PULLEY	1
21	01261-021-013FM	SAFETY ASSY	1
22	01259-022-013FM	RING FP20 / C18 x 24 x 22	2
23	01261-023-013FM	BELT LB 44 ORANGE	1
24	01259-024-013FM	TENSIONER KIT	1
25	01259-025-013FM	CLUTCH KIT	1
26	01261-026-013FM	STARTING STAR, LEFT	1
27	01261-027-013FM	Additional STAR RIGHT	1
28	01261-028-013FM	Additional STAR LEFT	1
29	01261-029-013FM	STARTING STAR, RIGHT	1
30	01101-942-013FM	PIN FM Ø10 x 42	4
31	01259-031-013FM	BLADE, LEFT	8
32	01259-032-013FM	BLADE, RIGHT	8
33	01259-009-013FM	SIDE COVER, RIGHT	1
34	01259-008-013FM	SIDE COVER, LEFT	1

(Subject to stock availability)

Rear cutter parts

Detail of rear cutter parts
01259-960-013FM: Rotavator F720

Note: the shaft of 34
is not included in the chain/bearing kit.
Order the transmission assembly
to replace both shafts.

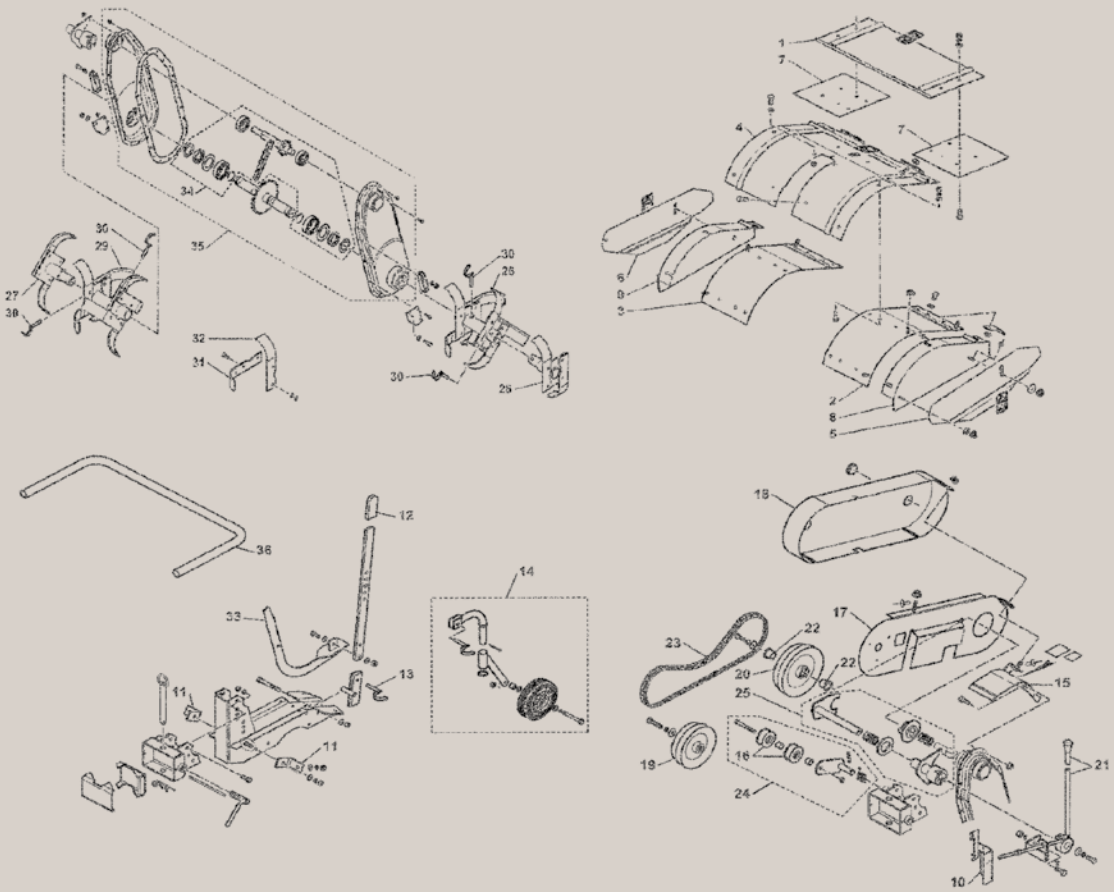

Id. No.	Reference	Description	Qty
1	01259-001-013FM	CENTRAL PART	1
2	01259-002-013FM	SIDE COVER, LEFT	1
3	01259-003-013FM	SIDE COVER, RIGHT	1
4	01259-004-013FM	CENTRAL COVER	1
5	01259-005-013FM	MOVING CHEEK, LEFT	1
6	01259-006-013FM	MOVING CHEEK, RIGHT	1
7	01259-007-013FM	SIDE PART	2
8	01259-008-013FM	SIDE COVER, LEFT	1
9	01259-009-013FM	SIDE COVER, RIGHT	1
10	01259-010-013FM	ELECT. SAFETY KIT	1
11	01261-008-013FM	COVER MOUNTING BRACKET	2
12	01259-012-013FM	PLASTIC SLEEVE	1
13	01199-G08-X34FM	PIN FM Ø 8 x 34	1
14	122NO	REAR WHEEL, COMPLETE	1
15	01259-015-013FM	SAFETY COVER	1
16	01259-016-013FM	TENSIONER	2
17	01259-017-013FM	WATERPROOF COVER F610 NO	1
18	01259-018-013FM	BELT COVER F610 NO	1
19	01259-019-013FM	PTO PULLEY	1
20	01259-020-013FM	CLAW PULLEY 158 x 170	1
21	01259-021-013FM	SAFETY ASSY	1
22	01259-022-013FM	RING FP20/ C18 x 24 x 22	2
23	01259-023-013FM	BELT LB 52	1
24	01259-024-013FM	TENSIONER KIT	1
25	01259-025-013FM	CLUTCH KIT	1
26	01259-026-013FM	STARTING STAR, LEFT	1
27	01259-027-013FM	Additional STAR RIGHT	1
28	01259-028-013FM	Additional STAR LEFT	1
29	01259-029-013FM	STARTING STAR, RIGHT	1
30	01101-942-013FM	PIN FM Ø 10 x 42	4
31	01259-031-013FM	BLADE, LEFT	10
32	01259-032-013FM	BLADE, RIGHT	10
33	01259-033-013FM	SHOE	1
34	01259-034-013FM	CASING REBUILD KIT	1
35	01259-035-013FM	MOUNTED CASING	1
36	01259-036-013FM	ROLL BAR	1

(Subject to stock availability)

Rear cutter parts

Detail of rear cutter parts
01260-960-013FM - Tiller F810

Note: the shaft of 34 is not included in the chain/ bearing kit.
Order the transmission assembly to replace both shafts.

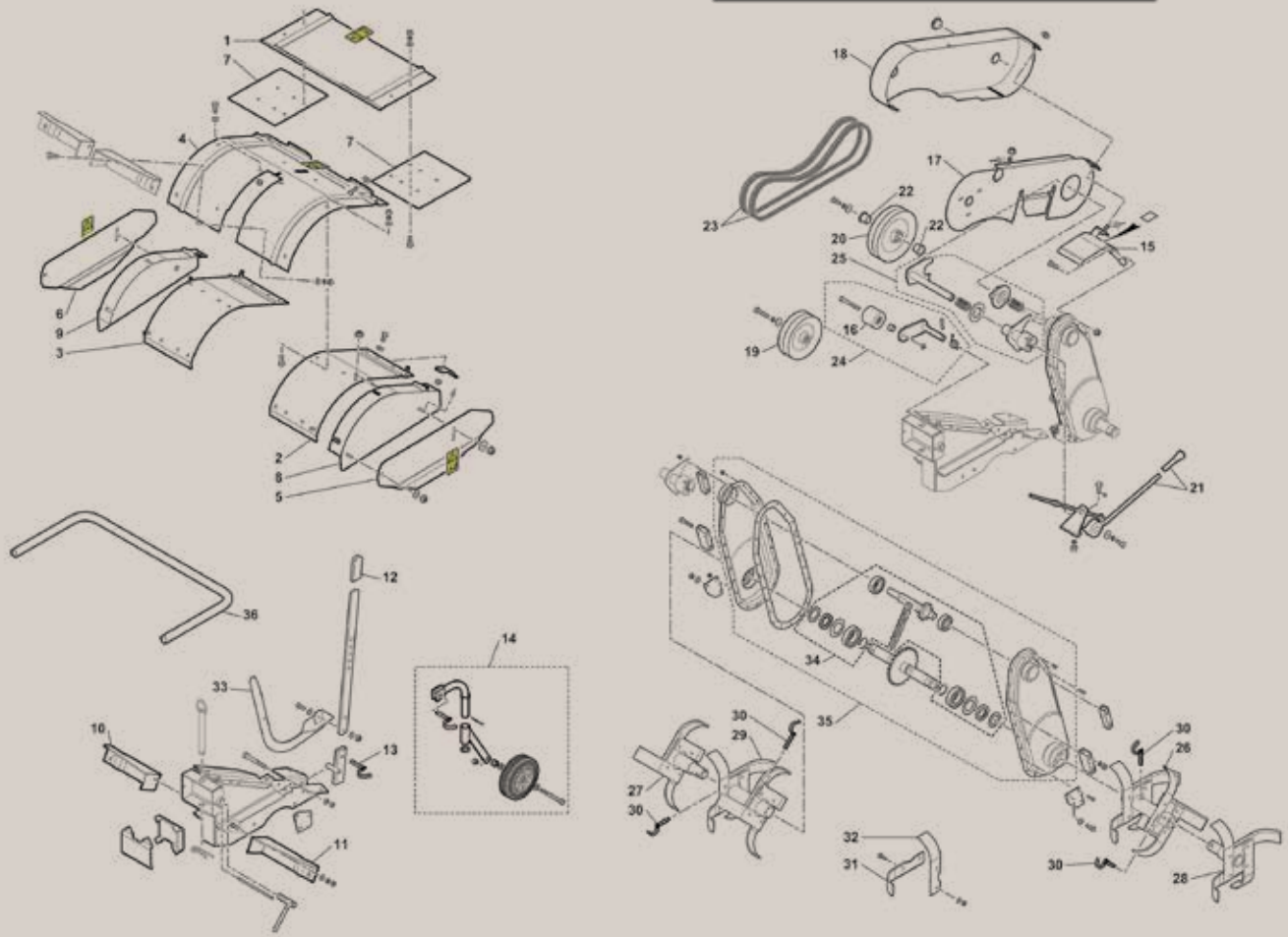

Id. No.	Reference	Description	Qty
1	01259-001-013FM	CENTRAL PART	1
2	01260-002-013FM	SIDE COVER, LEFT	1
3	01260-003-013FM	SIDE COVER, RIGHT	1
4	01259-004-013FM	CENTRAL COVER	1
5	01259-005-013FM	MOVING CHEEK, LEFT	1
6	01259-006-013FM	MOVING CHEEK, RIGHT	1
7	01259-007-013FM	SIDE PART	2
8	01259-008-013FM	SIDE COVER, LEFT	1
9	01259-009-013FM	SIDE COVER, RIGHT	1
10	01260-010-013FM	BRACKET, RIGHT	1
11	01260-011-013FM	BRACKET, LEFT	1
12	01259-012-013FM	PLASTIC SLEEVE	1
13	01199-G08-X34FM	PIN FM Ø8 x 34	1
14	122NO	REAR WHEEL, COMPLETE	1
15	01259-015-013FM	SAFETY COVER	1
16	01260-016-013FM	ROLLER	1
17	01260-017-013FM	WATERPROOF COVER NO CE95	1
18	01260-018-013FM	BELT COVER NO CE95	1
19	01260-019-013FM	PTO PULLEY	1
20	01260-020-013FM	CLAW PULLEY	1
21	01260-021-013FM	SAFETY ASSY	1
22	01259-022-013FM	RING FP20/ C18 x 24 x 22	2
23	01260-023-013FM	BELT GATES POW.6952	2
24	01260-024-013FM	TENSIONER KIT	1
25	01259-025-013FM	CLUTCH KIT	1
26	01259-026-013FM	STARTING STAR, LEFT	1
27	01260-027-013FM	Additional STAR RIGHT	1
28	01260-028-013FM	Additional STAR LEFT	1
29	01259-029-013FM	STARTING STAR, RIGHT	1
30	01101-942-013FM	PIN FM Ø10 x 42	4
31	01259-031-013FM	BLADE, LEFT	12
32	01259-032-013FM	BLADE, RIGHT	12
33	01259-033-013FM	SHOE	1
34	01259-034-013FM	CASING REBUILD KIT	1
35	01259-035-013FM	MOUNTED CASING	1
36	01259-036-013FM	ROLL BAR	1

(Subject to stock availability)

Rear cutter parts

Detail of rear cutter parts
Models up to December 2009
01257-956-013FM - Tiller F560

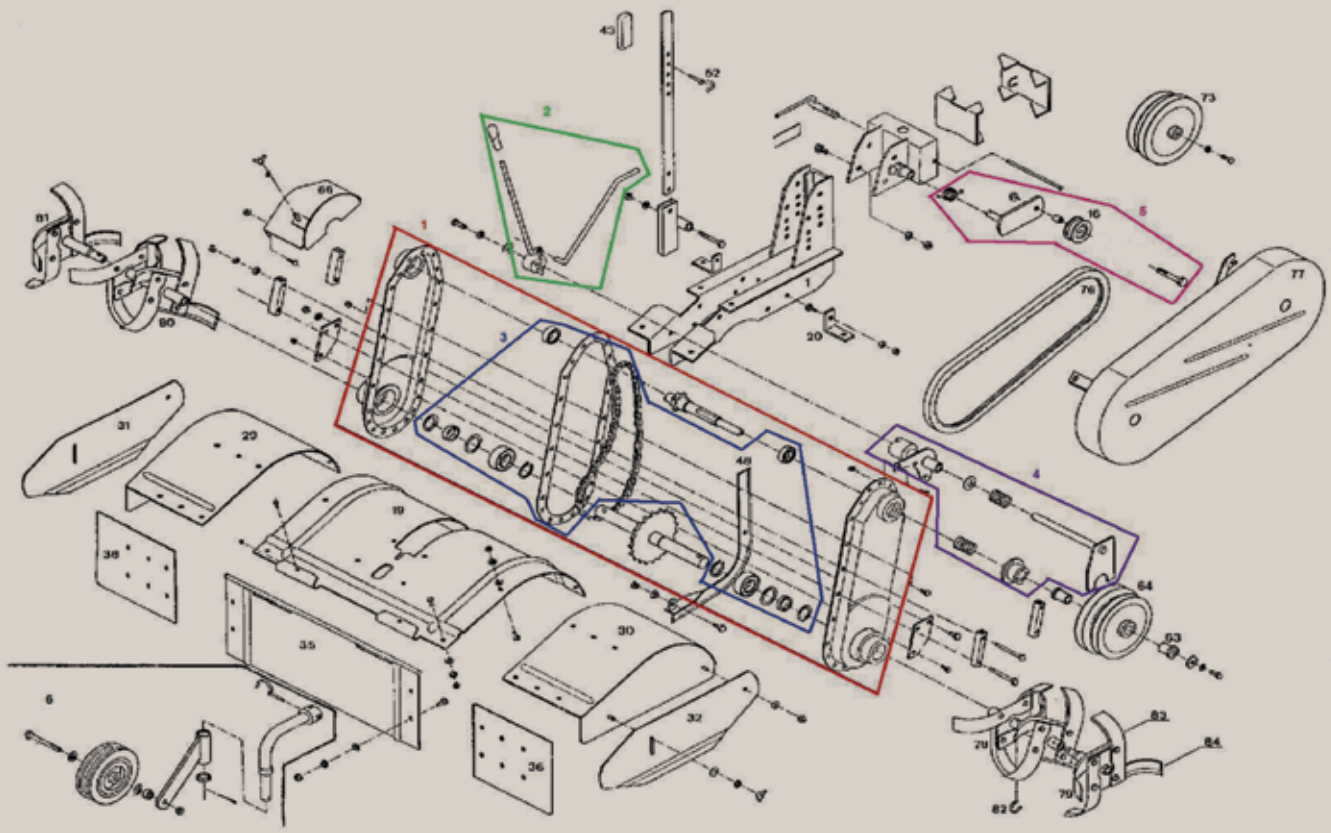

Id. No.	Reference	Description	Qty
1	01261-011-013FM	CASING KIT, COMPLETE, MINI	1
2	01261-021-013FM	SAFETY ASSY F560	1
3	01261-010-013FM	CASING REBUILD KIT	1
4	01259-025-013FM	CLUTCH KIT	1
5	01259-024-013FM	TENSIONER KIT	1
6	122NO	RCU REAR WHEEL, COMPLETE	1
16	01259-016-013FM	SINGLE PLASTIC ROLLER H20	2
19	01261-004-013FM	CENTRAL COVER, MINI	1
20	01261-008-013FM	CTL COV MTG BKT MINI NO	2
29	Not Available	SIDE COVER MINI RED L/H	1
30	Not Available	SIDE COVER MINI RED R/H	1
31	01259-005-013FM	MOBILE CHEEKS RED L/H NM	1
32	01259-006-013FM	MOBILE CHEEKS RED R/H NM	1
35	01261-001-013FM	CENTRAL PART MINI RED	1
36	01261-007-013FM	SIDE PART MINI RED	2
43	01259-012-013FM	PLASTIC SLEEVE 30 x 8 LG80	1
48	01259-033-013FM	SHOE, BLACK	1
52	01199-G08-X34FM	PIN FM 08 x 34	1
63	01259-022-013FM	RING FP20/ C18 x 24 x 22	2
64	01261-020-013FM	CLAW PULLEY 150 x 170	1
66	Not Available	SAFETY COVER, BLACK	1
73	01261-019-013FM	PTO PULLEY F560 BLACK	1
76	01261-023-013FM	BELT LB 44 ORANGE	1
77	Not Available	BELT COVER F560 BLACK CE95	1
78	01261-029-013FM	RCU ST. TINE R/H (40 x 5)	1
79	01261-027-013FM	ADD. TINE MINI 4BLS R/H (40 x 5)	1
80	01261-026-013FM	RCU ST. TINE MINI L/H(40 x 5)	1
81	01261-028-013FM	ADD. TINE MINI 4BLS L/H(40 x 5)	1
82	01101-942-013FM	PIN FM 10 x 42	4
83	01259-031-013FM	RCU BLS BLACK L/H (40 x 5)	8
84	01259-032-013FM	RCU BLS BLACK R/H (40 x 5)	8

(Subject to stock availability)

Rear cutter parts

Detail of rear cutter parts
Models up to December 2009
01256-960-013FM - Tiller F720

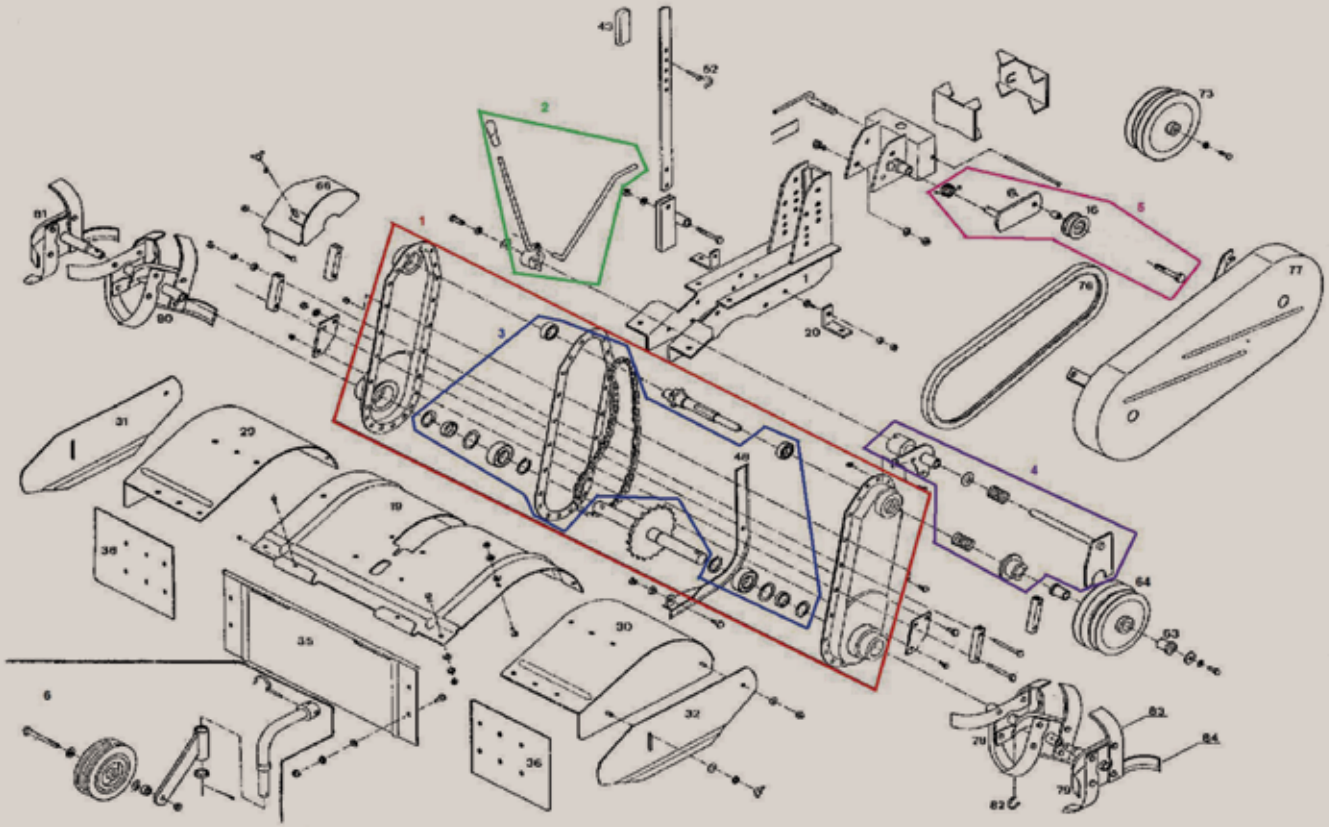

Id. No.	Reference	Description	Qty
1	01259-035-013FM	CASINGS NX BLACK MOUNTED	1
2	01259-021-013FM	SAFETY ASSY F720	1
3	01259-034-013FM	CASING REBUILD KIT	1
4	01259-025-013FM	CLUTCH KIT	1
5	01259-024-013FM	TENSIONER KIT	1
6	122NO	RCU REAR WHEEL, COMPLETE	1
16	01259-016-013FM	SINGLE PLASTIC ROLLER H20	2
19	01259-004-013FM	CENT. COVERS NX RED	1
20	01261-008-013FM	CTL COV MTG BKT MINI NO	2
29	Not Available	SIDE COVERS NX RED L/H	1
30	Not Available	SIDE COVERS NX RED R/H	1
31	01259-005-013FM	MOBILE CHEEKS RED L/H NM	1
32	01259-006-013FM	MOBILE CHEEKS RED R/H NM	1
35	01259-001-013FM	CENTRAL PART NX RED	1
36	01259-007-013FM	SIDE PART NX RED	2
43	01259-012-013FM	PLASTIC SLEEVE 30 x 8 LG80	1
48	01259-033-013FM	SHOE, BLACK	1
52	01199-G08-X34FM	PIN FM 08 x 34	1
63	01259-022-013FM	RING FP20/ C18 x 24 x 22	2
64	01259-020-013FM	CLAW PULLEY 158 x 170	1
66	Not Available	SAFETY COVER, BLACK	1
73	01259-019-013FM	PTO PULLEY F610 BLACK	1
76	01259-023-013FM	BELT LB 52 ORANGE	1
77	Not Available	BELT COVER	1
78	01259-029-013FM	RCU STD ST. TINE R/H (40 x 5)	1
79	01259-027-013FM	RCU ADD. TINE 2BLS R/H (40 x 5)	1
80	01259-026-013FM	RCU STD ST. TINE L/H (40 x 5)	1
81	01259-028-013FM	RCU ADD. TINE 2BLS L/H (40 x 5)	1
82	01101-942-013FM	PIN FM 10 x 42	4
83	01259-031-013FM	RCU BLS BLACK L/H (40 x 5)	10
84	01259-032-013FM	RCU BLS BLACK R/H (40 x 5)	10
85	01259-010-013FM	ELECT. SAFETY KIT	1

(Subject to stock availability)

Rear cutter parts

Detail of rear cutter parts
Models up to December 2009
01258-981-013FM - Tiller F810

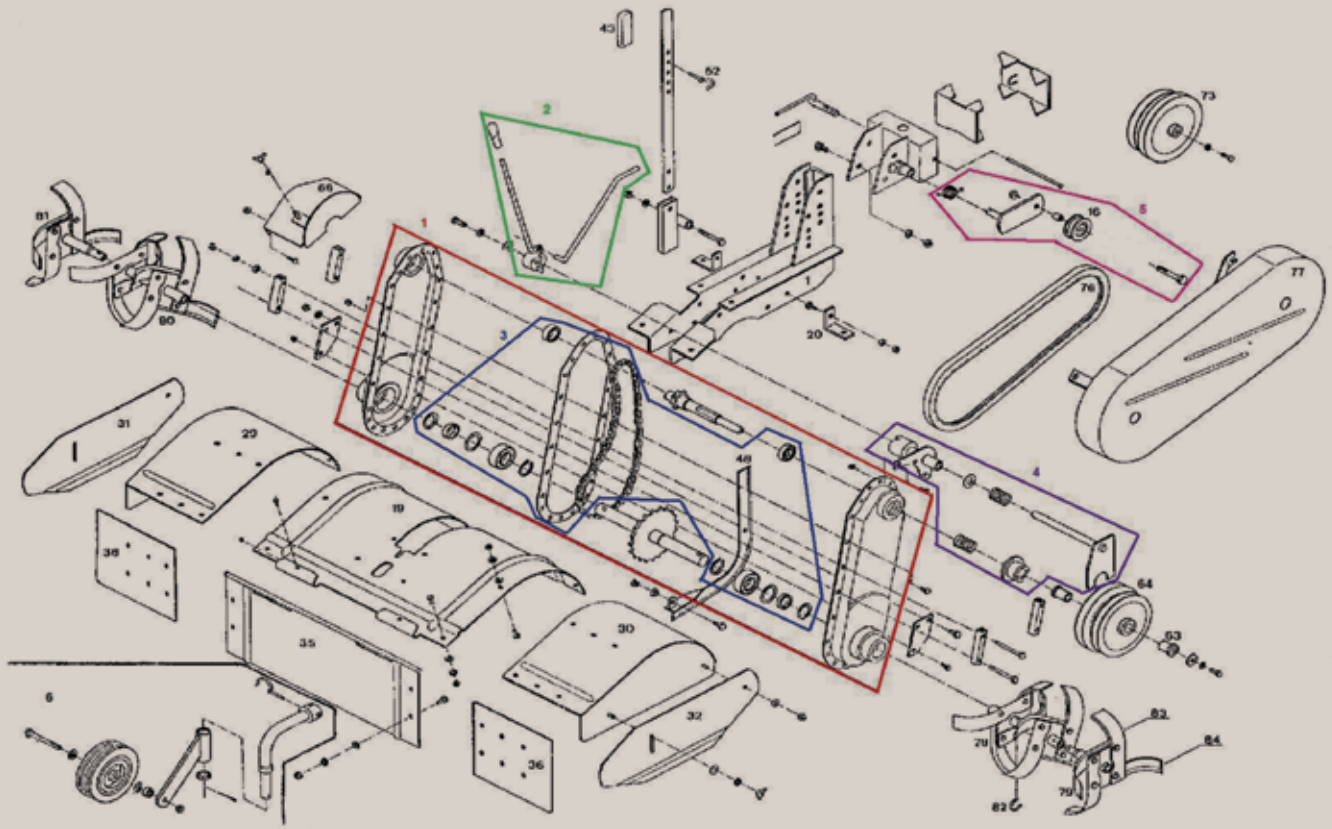

Id. No.	Reference	Description	Qty
1	01259-035-013FM	CASING KIT, COMPLETE	1
2	01260-021-013FM	SAFETY ASSY F810	1
3	01259-034-013FM	CASING REBUILD KIT	1
4	01259-025-013FM	CLUTCH KIT	1
5	01260-024-013FM	TENSIONER KIT	1
6	122NO	REAR WHEEL, COMPLETE	1
16	01260-016-013FM	ALU ROLLER FITTED	1
19	01259-004-013FM	CENT. COVERS NX RED	1
20	01261-008-013FM	CTL COV MTG BKT MINI NO	2
29	Not Available	SIDE COVER F810 RED L/H	1
30	Not Available	SIDE COVER F810 RED R/H	1
31	01259-005-013FM	MOBILE CHEEKS L/H	1
32	01259-006-013FM	MOBILE CHEEKS R/H	1
35	01259-001-013FM	CENTRAL PART NX RED	1
36	01259-007-013FM	SIDE PART NX RED	2
43	01259-012-013FM	PLASTIC SLEEVE 30 x 8 LG80	1
48	01259-033-013FM	SHOE, BLACK	1
52	01199-G08-X34FM	PIN FM 08 x 34	1
63	01259-022-013FM	RING FP20/ C18 x 24 x 22	2
64	01260-020-013FM	CLAW PULLEY F810 SPEC.	1
66	Not Available	SAFETY COVER, BLACK	1
73	01260-019-013FM	PTO PULLEY F810 DB 1 VIT.	1
76	01260-023-013FM	BELT GATES POW.6952	2
77	Not Available	BELT COVER F810 NO	1
78	01259-029-013FM	RCU STD ST. TINE R/H (40 x 5)	1
79	01260-027-013FM	RCU ADD. TINE 4 BLS R/H (40 x 5)	1
80	01259-026-013FM	RCU STD ST. TINE L/H (40 x 5)	1
81	01260-028-013FM	RCU ADD. TINE 4 BLS L/H (40 x 5)	1
82	01101-942-013FM	PIN FM 10 x 42	4
83	01259-031-013FM	RCU BLS BLACK L/H (40 x 5)	2
84	01259-032-013FM	RCU BLS BLACK R/H (40 x 5)	2

(Subject to stock availability)

Ploughing equipment

TILLER MODEL EQUIVALENCE TABLE					
Equivalence F506/F560 (Index 1)		Equivalence F660/F720 (Index 2)		Equivalence F810 (Index 3)	
Shaft dia.	Drawbar dia.	Shaft dia.	Drawbar dia.	Drawbar dia	Shaft dia.
23 mm	73 mm	26 mm	93 mm	34 mm	93 mm
FS28, F28, F300, F360, F400, F405, F410		F30, F40, F42, F50, FS50, F600		F800, F810	
F450, F460, F501, F506, F510, F560, FJ500		F610, F660, F700, F720			

Our kit includes:
1 plough + 1 pair of wheels + wheel weights + 1 23-kg front counterweight + 1 hubs & extensions*
*(for F506 only)

PLOUGHING EQUIPMENT, WITH WHEEL WEIGHTS, WHEELS AND COUNTERWEIGHT										
	Plough pack	Plough	Characteristics	Pair of wheels Stabilarge profile	Dimensions	Wheel flanges with differential effect and extensions	Wheel weight	Weight	Counterweight Front	Weight
	Reference	Reference		Reference		Reference	Reference		Reference	
F506 (1)	01260-COM-F506	06780-925-000HE	1/2 turn 6"	42700-925-000HE	5.0 x 10	06451-925-000HE 06450-925-000HE	06591-925-000HE	32 kg per unit	06590-925-000HE	23 kg without support
F560 (1)	01260-COM-F560	06780-925-000HE	1/2 turn 6"	42700-925-000HE	5.0 x 10		06591-925-000HE	32 kg per unit	06590-925-000HE	23 kg without support
F720 (2)	01260-COM-F720	06780-940-000HE	1/2 turn 7"	42700-940-000HE	6.0 x 12		06591-940-000HE	44 kg per unit	06590-925-000HE	23 kg without support
F810 (3)	01260-COM-F810	06780-950-000HE	1/2 turn 8"	42700-950-000HE	6.5 x 15		06591-950-000HE	50 kg per unit	06590-925-000HE	23 kg without support
F810 (3)	01270-COM-F810	06780-960-000HE	1/4 turn 8"	42700-950-000HE	6.5 x 15		06591-960-000HE	25 kg per unit	06590-925-000HE	23 kg without support

All these kits include front weight support 06821-925-000HE

(1), (2), (3)* If you cannot find your model, please refer to the tiller model equivalence table

(Subject to stock availability)

❶ Plough 1/4 turn

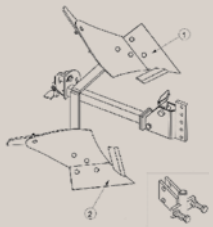

❷ Plough 1/2 turn

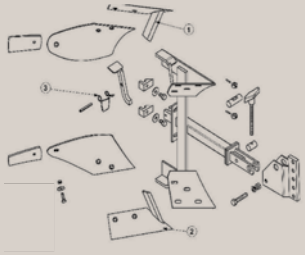

Our plough kit includes: 1 plough + 1 pair of wheels

PLOUGHING EQUIPMENT, WITHOUT WHEEL WEIGHTS OR COUNTERWEIGHT					
	Plough combination (without weights)	Plough	Characteristics	Pair of wheels Stabilarge profile	Dimensions
	Reference	Reference		Reference	
F560 (1)	01262COMF560	06780-925-000HE	1/2 turn 6"	42700-925-000HE	5.0 x 10
F720 (2)	01262COMF720	06780-940-000HE	1/2 turn 7"	42700-940-000HE	6.0 x 12
F810 (3)	01262COMF810	06780-950-000HE	1/2 turn 8"	42700-950-000HE	6.5 x 15

(1), (2), (3)* If you cannot find your model, please refer to the tiller model equivalence table

(Subject to stock availability)

❶ PLOUGH 1/4 TURN - DETAIL			
	PLOUGH	LEFT BLADE (1)	RIGHT BLADE (2)
	Reference	Reference	Reference
F810	06780-960-000HE	72721-950-003HE	72731-950-003HE

(Subject to stock availability)

❷ PLOUGH 1/2 TURN - DETAIL				
	PLOUGH	LEFT BLADE (1)	RIGHT BLADE (2)	SPRING (3)
	Reference	Reference	Reference	Reference
F506/F560	06780-925-000HE	72721-925-003HE	72731-925-003HE	17711-925-003HE
F720	06780-940-000HE	72721-940-003HE	72731-940-003HE	17711-925-003HE
F810	06780-950-000HE	72721-950-003HE	72731-950-003HE	17711-925-003HE

FURROW CLOSERS	
Reference	Characteristics
06955-940-112HE	Half-turn furrow closers
06955-940-114HE	Quarter-turn furrow closers

(Subject to stock availability)

Ploughing equipment

TILLER MODEL EQUIVALENCE TABLE					
Equivalence F506/F560 (Index 1)		Equivalence F660/F720 (Index 2)		Equivalence F810 (Index 3)	
Shaft dia.	Drawbar dia.	Shaft dia.	Drawbar dia.	Shaft dia.	Drawbar dia.
23 mm	73 mm	26 mm	93 mm	34 mm	93 mm
FS28, F28, F300, F360, F400, F405, F410		F30, F40, F42, F50, FS50, F600		F800, F810	
F450, F460, F501, F506, F510, F560, FJ500		F610, F660, F700, F720			

COMPLETE PLOUGHING EQUIPMENT - SINGLE BLADE PLOUGH										
	Single Plough Combination	Plough	Characteristics	Pair of wheels Stabilarge profile	Dimensions	Wheel weight	Weight	Counterweight	Weight	Wheel flanges with differential effect and extensions
	Reference	Reference		Reference		Reference		Reference		Reference
F506 (1)	01261-COM-F506	06860-925-000HE	Single blade plough 6"	42700-925-000HE	5.0 x 10	06591-925-000HE	32 kg per unit	06590-923-000HE	15 kg without support	06451-925-000HE 06450-925-000HE
F560 (1)	01261-COM-F560	06860-925-000HE	Single blade plough 6"	42700-925-000HE	5.0 x 10	06591-925-000HE	32 kg per unit	06590-923-000HE	15 kg without support	
F720 (2)	01261-COM-F720	06860-940-000HE	Single blade plough 7"	42700-940-000HE	60 x 12	06591-940-000HE	44 kg per unit	06590-923-000HE	15 kg without support	

All these kits include front weight support 06821-925-000HE

(1), (2), (3)* If you cannot find your model, please refer to the tiller model equivalence table

(Subject to stock availability)

SINGLE BLADE PLOUGH WITHOUT WHEELS					
	Single Plough Combination	Plough	Characteristics	Counterweight Front	Weight
	Reference	Reference		Reference	
F506 (1)	01261-CHA-F560	06860-925-000HE	Single blade plough 6"	06590-923-000HE	15 kg without support
F560 (1)	01261-CHA-F560	06860-925-000HE	Single blade plough 6"	06590-923-000HE	15 kg without support
F720 (2)	01261-CHA-F720	06860-940-000HE	Single blade plough 7"	06590-923-000HE	15 kg without support

(1), (2), (3)* If you cannot find your model, please refer to the tiller model equivalence table

(Subject to stock availability)

❶ Plough and blade

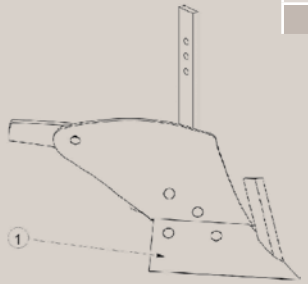

Plough	Plough	Blade (1)
	Reference	Reference
❶ F720	06860-940-000HE	72731-940-003HE

(Subject to stock availability)

Ridgers and potato lifters

RIDGERS AND POTATO LIFTERS

	Ridger assembly Double drawbar 73	Ridger assembly Double drawbar 93	Ridger assembly Single drawbar 73	Ridger assembly Single drawbar 93	Potato lifter assembly Drawbar 73	Potato lifter assembly Drawbar 93
	Reference	Reference	Reference	Reference	Reference	Reference
F360/501/FJ500 (1)	01255-POR-073		01255-SUP-073		01255-CHA-073	
F506 (1)	01255-POR-073		01255-SUP-073		01255-CHA-073	
F560 (1)	01255-POR-073		01255-SUP-073		01255-CHA-073	
F660/F720 (2)		01255-POR-093		01255-SUP-093		01255-CHA-093
F810 (3)		01255-POR-093		01255-SUP-093		01255-CHA-093

(1), (2), (3)* If you cannot find your model, please refer to the tiller model equivalence table

(Subject to stock availability)

DETAIL OF RIDGER AND AND POTATO LIFTER ASSEMBLIES

	Tool bar and fastener	Transport wheel Adjustable	Ridgers	Qty/Dimensions	Potato lifters	Attachment part
Reference	Reference	Reference	Reference		Reference	Reference
01255-POR-073	06410-960-000HE	06730-940-000HE	06795-V19-000HE	in a pack of 2: 40 x 15		06510-940-000HE
01255-POR-093	06410-960-000HE	06730-940-000HE	06795-V19-000HE	in a pack of 2: 40 x 15		06510-960-000HE
01255-SUP-073			06795-V19-000HE	40 x 15		06520-940-000HE
01255-SUP-093			06795-V19-000HE	40 x 15		06520-960-000HE
01255-CHA-073					06700-926-000HE	06520-940-000HE
01255-CHA-093					06700-926-000HE	06520-960-000HE

(Subject to stock availability)

Ridger and coupling kit

Model	Reference
FF300	01255-BUT-FF3
FF500	01255-BUT-FF5

(Subject to stock availability)

SNOW EQUIPMENT

	Snow blade		Snow blade holder	Pair of wheels		Wheel weight	
	Reference	Dimension	Reference	Reference	Characteristics	Reference	Weight
F360/FJ500/F501*	01202-734-102 Pads included	Width 100 cm	01202-734-104	44710-005-K10SH	Pair of wheels 3, 5 x 5 and weights 2 x 10 kg	Wheels included	
F506	01202-734-102 Pads included	Width 100 cm	01202-734-104	44710-008-K14SH	Pair of wide AS wheels 16 x 6.5	01201-734-150	2 x 33 kg
F560	01202-734-102 Pads included	Width 100 cm	01202-734-104	44710-008-K14SH	Pair of wide AS wheels 16 x 6.5	01201-734-150	2 x 33 kg
F720	01202-735-100 Pads included	Width 120 cm	01202-734-300	44710-008-K14SH	Pair of wide AS wheels 16 x 6.5	01201-734-150	2 x 33 kg

* Except model SE

(Subject to stock availability)

	Wheel flanges with differential effect and extensions		Snow chains		Rubber wear blade, 15 mm thick	Steel retainer plate for rubber blade	Shoe
	Reference	Description	Reference	Characteristics	Reference	Reference	Reference
FJ500/F501*	06450-925-000HE	Extensions	01202-734-240	Type of struts for wheels 3.5 x 5 (delivered in packs of 2)	01202-734-110	01202-734-115	01202-734-120
F506	06451-925-000HE 06450-925-000HE	Pair of wheel flanges Pair of extensions	01202-734-220	Type of struts for wheels 16 x 6.5 (delivered in packs of 2)	01202-734-110	01202-734-115	01202 734-120
F560			01202-734-220	Type of struts for wheels 16 x 6.5 (delivered in packs of 2)	01202-734-110	01202-734-115	01202-734-120
F720					01202-735-110		

* Except model SE

(Subject to stock availability)

Engine parts

	NGK spark plug		Nippon Denso spark plug		Air filter			Recoil starter		Belt		Clutch cable		Throttle cable	
	Reference	Engine V°/ Serial No.	Reference	Engine serial No.	Reference	Engine	Pack.	Reference	Engine V°/ Serial No.	Reference	Type	Reference	Version/Type	Reference	Version/ Type/Serial No.
F110	98073-54744				17211-782-000			28400-ZC3-A01						17910-782-000	
F200	98073-54944		98073-54954		17210-896-505							54510-737-J00		17910-729-720	2012179~ (D/F1/C)
F210/K1/K2/ K3/K4/K5	98073-54744	F/FS (K1/K2)	98073-54754		17210-896-505			28400-ZG1-004	2494333~			54510-737-J00 54510-737-M40	F/FS (K1/K2) FE/FES (K2/K3/K4/K5)	17910-737-000 17910-737-010 17910-737-611	~2235230 2235231~ K3 / K4
F220/K1			98056-54757		17211-ZL8-023 MULTIPACK		Blister	28400-Z0G-013ZB				54510-V14-641 54510-V14-A40	DE/GE K1/GE	17910-V14-641	
F250	98073-54944		98073-54954		17210-896-505									17910-729-720	
F260	98073-54744		98073-54754		17210-896-505									17910-737-000	
F28	98056-56713				17211-844-000					23161-708-505					
F310	98079-56846 X10 98079-55846 X10	~1151663 1151664~	98079-56855 98079-55855	~1151663 1151664~	17210-ZE0-505			28400-ZE1-811ZF		22431-733-622	37			17910-733-003	
F315	98079-56846 X10		98079-56855		17210-ZE0-505 MULTIPACK			28400-ZH8-013YA		PB13460	Forward			PB13130B	
F320/K1			98079-55855		17210-ZE0-505 MULTIPACK			28400-ZE1-003ZF MULTIPACK							
F325	98079-56846 X10		98079-56855		17210-ZE0-505 MULTIPACK			28400-ZH8-013YA		PB13460 PB13464	Forward Reverse	PB13148 PB13147	E (reverse) Forward	PB13130B	
F340/K1/K2	98079-55846 X10		98079-55855		17210-ZE0-505 MULTIPACK MULTIPACK			28400-ZH8-013YA MULTIPACK MULTIPACK		22431-733-622	37	54510-733-R80 54510-733-D60	F340/K1 K2	17910-733-013	K1 K2
F360/K1/K2/ K3/K4/K5	98079-55846 X10		98079-55855		17210-ZE0-505 MULTIPACK			28400-ZE1-811ZF MULTIPACK 28400-ZH8-013YA	K0/K1 K2/K3/K4/K5	22431-733-622	37	54510-733-R80 54510-733-M30 54510-733-B30	K1/K2/K3/K4 K5	17910-733-013 17910-733-920 17910-733-921 17910-733-B30	K1/K2 K3/K4 K5
F380	98079-55846 X10		98079-55855		17210-ZE0-505 MULTIPACK			28400-ZE1-811ZF		22431-733-622	37	54510-734-630			
F400/K1	98076-56716 98076-54746	G35 K1(G150)			17403-841-000			28400-883-505	G150 (F)	22431-723-672 22433-762-003	F1 (SB-35) F2 (SB-30)	54510-723-010		17910-723-020	K1
F405/K1	98079-54846 X10		98079-54855		17210-ZE6-505 MULTIPACK	GXV120		28400-ZE6-003ZD							
F410	98079-56846 X10 98079-55846 X10	~1151663 1151664~	98079-56855 98079-55855	~1151663 1151664~	17210-734-505	GX110		28400-ZE1-811ZF		22431-734-013	40	54510-734-630		17910-734-000	
F42/K1/K2	98076-56740	K0/K1			17403-841-000					22431-719-000	LB39			17910-709-682	K1/K2
	98076-56716	K2													
F420/K1/ K2/K3			98079-55855		17210-734-505			28400-ZE1-811ZF 28400-ZH8-013YA	GX110 GX120K1	22431-734-013	40	54510-734-630 54510-734-M60	K1 K2/K3	17910-734-000 17910-734-010	K1/K2 K3

(Subject to stock availability)

X10 Note: this reference is packaged in units of 10.

MULTIPACK Multipack available: see p. 10

	NGK spark plug		Nippon Denso spark plug		Air filter			Recoil starter		Belt		Clutch cable*		Throttle cable	
	Reference	Engine version/ Serial No.	Reference	Engine serial No.	Reference	Engine	Pack.	Reference	Engine V°/ Serial No.	Reference	Type	Reference	Version/Type	Reference	Version Type/Serial No.
F450	98076-54947		98076-54954		17403-841-000			28400-883-505		22433-762-003	SB-30			17910-723-020	
F460/K1/K2	98079-56846 98079-55846	~1151663 1151664~	98079-56855 98079-55855	~1151663 1151664~	17210-734-505			28400-ZE1-811ZF 28400-ZH8-013YA	 K2	22431-734-013	40	54720-734-J20*		17910-734-000	
F501/K1/K2/K3/K4/K5/ K6/K7	98079-55846		98079-55855		17210-ZE1-505			28400-ZE1-811ZF 28400-ZH8-013YA 28400-ZH8-033YA 28400-Z4M-003ZA	 K2/K3/K4 K5/K6 K7	22431-733-752 22431-727-013	K1/K2/K3/K4 K5/K6/K7	54510-733-R80 54510-V33-000 54510-733-A60	K1/K2/K3/K4/K7 K5 K6	17910-733-003 17910-733-013 17910-733-G00	 K3/K4/K7 K5/K6
F506/K1/K2/K3	98079-55846		98079-55855		17210-734-505	GX160		28400-ZH8-013YA 28400-ZH8-033YA 28400-Z4M-003ZA	 K2 K3	22431-734-013 22431-V34-003	40 K3	54510-734-M60 54510-734-L60	 K2/K3	17910-734-010 17910-734-L60	K2 K3
F520/K1/K2/K3	98079-55846		98079-55855		17210-734-505	GX140/ GX160		28400-ZE1-811ZF 28400-ZH8-013YA	GX140 GX160K1	22431-734-013	40	54510-734-630 54510-734-M60	K1/K2 K3	17910-734-000	
F560/K2/K3/K4/K5/K6	98079-55846		98079-55855		17210-734-505	GX160		28400-734-003ZA 28400-ZH8-013YA	K0/K2 K3/K4/K5/K6	22431-734-013 22431-V34-003	40 SB-41 (K6)	54720-734-J20* 54720-734-T40*	K0/K2/K3 K4/K5/K6	17910-734-000 17910-734-010 17910-734-961	K0/K2 K3 K4/K5
F600	98076-54746 98076-54947	G200FD G200FF2			17403-841-000			28400-883-505		22431-727-013 22431-727-642	F (SB-38) F2 (RCLC-42)	54720-734-J20* 54720-727-000* 54720-727-640*	K2 F1 F2, K2/K3 (~2203937)	17910-727-010	F
F610	98079-55846		98079-55855		17210-734-505			28400-ZE1-811ZF		22431-735-013	SB-42.5	54720-735-010*		17910-735-000	
F650	98079-55846				17403-841-000										
F660/K2/K3/K4/K5	98079-56841 98079-55846	K2/K3/K4	98079-56855 98079-55855	K2/K3/K4	17210-734-505	GX160		28400-ZE1-811ZF 28400-ZH8-013YA	 K3/K4/K5	22431-735-013	SB-42.5	54720-735-010* 54720-735-J00* 54720-735-M60*	 K3 K4/K5	17910-735-000 17910-735-010 17910-735-621	 K3 K4/K5
F720/K1/K2	98079-55846 98079-55876	K2	98079-55855		17210-734-505			28400-ZH8-013ZB 28400-ZH8-033YA 28400-Z4M-003ZA	K1 K2	22431-735-J41 22431-V35-003	42.5 SB-43.5 (K1/K2)	54720-735-M60*	K0/K1/K2	17910-735-621 17910-735-F20	K1/K2
F800	98076-54947				17403-728-000			28400-890-030ZD		22431-727-642	RCLC-42	54720-728-680*		17910-728-750	
F810/K1/K2/K3	98079-55846		98079-55855		17210-ZE2-515	GX240		28400-ZE2-W02ZN	K0/K1/K2/K3	22431-765-631	SB-48	54720-765-630* 54720-765-C30*	K0 K1/K2	17910-765-801 17910-765-D30	1101779~ K1 K2/K3
FF300/K1			98056-54757		17211-ZL8-023		Blister	28400-Z0G-A71				54525-V19-000		17919- V19- 003	
FF500/K1	98079-56846				17211-ZL8-023		Blister	28400-Z0Y-013ZB				54525-V24-000		17910-V24-003	
FG110/K1/K2	31915-Z0H-003	K1/K2	98056-55757		17211-ZM3-800 17211-Z0H-800	K1/K2		28400-ZM3-003ZA 28400-Z0H-003	K1 K2			54510-V06-003 54510-V25-640 54510-V25-840	 K1 K2		
FG200			98056-54757		17211-ZM7-000			28400-ZM7-003						17910-799-000	
FG201/K1			98056-54757		17211-ZL8-023		Blister	28400-ZM7-003						17910-V18-650 17910-V18-840	 K1
FG205/K1			98056-54757		17211-ZL8-023		Blister	28400-ZM7-003						17910-V18-650 17910-V18-840	 K1
FG314	98079-56846				17211-ZL8-023		Blister	28400-ZL8-023ZC		PB13600 80045 V40 003	E1 E2			PB62764 PB13826B	 8300001~8399999)
FG315	98079-56846				17211-ZL8-023			28400-ZL8-023ZC		PB13600 80045 V40 003	E1 E2			PB62764 PB13825	 8300001~8399999)
FG315K1/K2	98079-56846				17211-ZL8-023		Blister	28400-ZL8-023ZC		80044-V40-003 80045-V40-003	DE1 DE2			80032-V40-000	
FG400/K1	98079-56846				17211-ZL8-023		Blister	28400-ZL8-023ZC		22431-727-013	SB-38	54510-V08-000		17910-V08-000 17910-V08-B60	 K1
FG500	98079-56846				17211-ZL8-023		Blister	28400-ZL8-023ZC		22431-727-013	SB-38	54510-V08-000		17910-V08-000	
FR750/K1/K2/K3	98079-55846 98079-55876	K3	98079-55855		17210-734-505	GX160		28400-ZH8-013YA 28400-Z0T-003ZB 28400-Z4M-003ZA	K2 K3	22431-777-731	SB-38	54525-777-761	K0/K1	17910-777-761	
FT315	98076-54947				17403-841-000			28400-883-505		PB13460	Forward	PB13147	Forward	PB13131	
FT325	98076-54947				17403-841-000			28400-ZH8-013YA 28400-883-505	GX120K1 G150	PB13460 PB13464	Forward Reverse	PB13147 PB13148	Forward E (reverse)	PB13131	
FX25	98076-56716				17211-844-000										
FJ500	98079-55846		98079-55855		17210-Z1T-A11			28400-Z1T-A12ZA		22431-727-013		54510-V42-000		17910-V42-000	

(Subject to stock availability)

* Minimum order quantity : two units

Note: this reference is packaged in units of 10.

Multipack available: see p. 10

Accessories and maintenance

- **Connection cables for parallel operation** are available for generators in the EU range. One cable allows 2 **identical** generators to be coupled, doubling the available power.

Connection cables for parallel operation		
	Reference	Description
EU10i	32360-ZC3-000	Allows connection of 2 EU10i: Rated output in parallel operation: 1800 VA Max. output in parallel operation: 2000 VA
EU20i	32360-Z07-C61 Up to Serial No. 1725107 32360-Z07-C63 From Serial No. 1725108	Allows connection of 2 EU20i: Rated output in parallel operation: 3200 VA Max. output in parallel operation: 4000 VA
EU20ik1	32360-Z07-C63	Allows connection of 2 EU20iK1: Rated output in parallel operation: 3200 VA Max. output in parallel operation: 4000 VA
EU20iT1	32360-Z07-C63	Allows connection of 2 EU20iT1: Rated output in parallel operation: 3200 VA Max. output in parallel operation: 4000 VA
EU26i	32360-Z28-C61	Allows connection of 2 EU26i: Rated output in parallel operation: 4.8 kVA Max. output in parallel operation: 5.2 kVA
EU30i/is		Allows connection of 2 EU30i/is: Rated output in parallel operation: 5.6 kVA Max. output in parallel operation: 6.0 kVA

(Subject to stock availability)

- The **rev counter/hour meter** displays the engine speed (r.p.m.) and the total number of hours worked. It is particularly useful for professionals on sites and to monitor the set maintenance frequency.

Rev counter / Hour meter	
Reference	Description
08174-ZL8-010HE	Fits to the spark plug cable of all Honda petrol engines

(Subject to stock availability)

Charger cables		
	Reference	Description
EX7 EU10i EU20i EU26i EU30is	32650-892-013	Charger cable for battery (Connector + Cable with alligator clips)
	32651-892-003	Charger cable plug (Connector only)
EM3100CX EM4500CX/CSX EM5500CX/CSX	32650-825-005	Charger cable for battery (Cable with alligator clips)

(Subject to stock availability)

❶

❷

Honda OptiMate Pack		Hona OptiMate	
Reference	Packaging	Reference	Description
❶ 08M51-EWA-835E	Honda OptiMate + display box 1: - 3 x Honda OptiMate 3+ - 3 x Honda OptiMate 5 - 1 x display (can contain up to 3 OptiMate)	❷ 08M51-EWA-802Z	OptiMate 3+*
❶ 08M51-EWA-850E	Honda OptiMate + display box 2: - 6 x Honda OptiMate 5 - 1 x display (can contain up to 3 OptiMate)	❷ 08M51-EWA-800E	OptiMate 5**

* For lead/acid batteries from 2 to 32 Ah
** For lead/acid batteries from 7 to 120 Ah

(Subject to stock availability)

Generator sets

Protective covers

MAKE SURE TO PROTECT your generator after use.
Prolong its life by protecting it from all attacks.

❶ Grey cover

❷ Camouflage cover with handle access flap

❸ "Honda Marine" blue cover

You can choose from a wide range, depending on your product and its use:

❹ Khaki camouflage cover with handle access flap

❺ "Honda Marine" grey cover

❻ Blue cover

❼ "Honda Generators" grey cover

❽ "Honda Generators" grey cover

❾ "Honda Generators" grey cover for models with wheel kit

❿ "Honda Generators" grey cover for models with wheel kit and fixed handlebars

Generator covers

	Reference	Type
EU10i	❷ 08P57-ZT3-00G	Camouflage cover with handle access flap
	❽ 08P57-ZT3-00S	"Honda Generators" grey cover
	❹ 08P58-ZT3-100G	Khaki camouflage cover with handle access flap
	❶ 08P58-ZT3-100S	Grey cover with handle access flap
	❺ 08381-340-023	"Honda Marine" grey cover
	❸ 08391-340-024	"Honda Marine" blue cover
EU20i	❷ 08P57-Z07-00G	Camouflage cover with handle access flap
	❶ 08P58-Z07-100S	Grey cover with handle access flap
	❺ 08381-Z07-002	"Honda Marine" grey cover
	❽ 08P57-Z07-00S	"Honda Generators" grey cover
	❹ 08P58-Z07-100G	Khaki camouflage cover with handle access flap
	❸ 08391-Z07-003	"Honda Marine" blue cover
EU26i and EU30is	❽ 08P57-ZS9-00S	"Honda Generators" grey cover
	❶ 08P58-ZS9-100S	Grey cover with handle access flap
	❷ 08P57-ZS9-00G	Camouflage cover with handle access flap
	❹ 08P58-ZS9-100G	Khaki camouflage cover with handle access flap
	❻ 08P59-ZS9-00B	"Honda" blue cover
EU30i	❽ 08P58-Z28-00S	"Honda Generators" grey cover
	❹ 08P58-Z28-00G	Khaki camouflage cover with handle access flap
	❻ 08P58-Z28-00B	"Honda" blue cover
EU65is	❾ 08P57-Z25-500	"Honda Generators" grey cover for models with wheel kit
EM50is, EM65is, EM70is	❾ 08P57-Z11-200	"Honda Generators" grey cover for models with wheel kit
EG3600CLF, EG4500CLF, EG5500CLF EM3100CXF, EM4500CXF, EM5500CXF	❿ 08P58-Z22-600	"Honda Generators" grey cover for generators equipped with wheel kit and fixed handlebars
EG3600CLF, EG4500CLF, EG5500CLF	❼ 08P58-Z30-000	"Honda Generators" grey cover

(Subject to stock availability)

Transport kits

Think about **transport kits** that allow Honda generators to be moved with minimum effort. They are particularly useful on building sites.

The **Lifting kit** facilitates lifting of the generator. The hook is also useful for securing the generator so as to avoid theft.

Trolley	
	Reference
EU20	06710-Z07-000AH

(Subject to stock availability)

USE IT!

The **trolley** for EU20

	2-wheel transport kit	4-wheel transport kit	Lifting kit
	Reference	Reference	Reference
EC2000K1/ECM2800K2/K3/K4	06427-ZD5-S41		
EC2100/EC2200/EC3600/EC4000/EC5000	06427-ZS8-010		06810-ZP3-000
EC6000	06427-ZS8-010		06810-ZP3-000
ECT6500	06427-ZS8-010		06810-ZP3-000
ECT7000 /K1	06427-ZS8-010		
EG3600CL	06710-Z22-A40ZA		
EG4500CL	06710-Z22-A40ZA		
EG5500CL	06710-Z22-A40ZA		
EM3100CX	06710-Z22-A40ZA	06710-Z22-A30	06810-Z22-A30ZA
EM4500CX/CXS	06710-Z22-A40ZA	06710-Z22-A30	06810-Z22-A30ZA
EM4500CXS2	06420-Z23-F40ZA		
EM5500CX/CX1/CXS	06710-Z22-A40ZA	06710-Z22-A30	06810-Z22-A30ZA
EU26i		06427-ZS9-000	
EU30is		06427-ZS9-000	
EM50is	Standard		06531-Z11-E00ZA
EU65is	Standard		06531-Z11-E00ZA
EM65is	Standard		06531-Z11-E00ZA
EM70is	Standard		06531-Z11-E00ZA

(Subject to stock availability)

Generator sets

Remote controls and accessories

- The **remote control unit** allows Honda generators fitted with an electric starter to be started remotely. Combined with a changeover switch, this assembly guarantees electric power supply to the equipment in the event of a power failure.
- The **remote control kit** allows the generator to be started even when it is inaccessible.

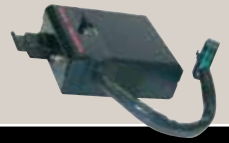

	Remote control unit	Required components	Remote control cable 10m	Remote control unit
	Reference		Reference	Reference
EX4000	31610-ZB4-000ZB		31690-893-720	31650-ZB7-A31
EX4000SK1	31610-ZC2-A62ZC		31690-893-720	31650-ZB7-B53
EX5500	31610-893-720ZB	Relay: 31650-ZA0-800 + fixing*	31690-893-720	
EX5500K1				
EX5500K2	31610-ZA0-862ZB	Relay: 31650-ZA0-800 + fixing*	31690-893-720	

* See GIT2

(Subject to stock availability)

	Remote control kit (unit + control)			Spare control (not to be used as extension)	
	10 m	20 m	30 m	10 m	30 m
EM4500CXS	06610-Z22-830ZA	06610-Z22-840ZA	06610-Z22-850ZA		
EM5500CXS	06610-Z22-830ZA	06610-Z22-840ZA	06610-Z22-850ZA		
EM50is EM65is EM70is EU65is	32380-Z11-840ZA		32380-Z11-860ZA	32520-Z11-800	32520-Z11-820

(Subject to stock availability)

This sign tells you to be careful during certain operations. Please refer to the safety instructions in the machine user manual.

Generator sets

Engine parts

All terrain generator

		NGK spark plug		Nippon Denso spark plug		Air filter		Fuel filter
		Reference	Info	Reference	Info	Reference	Packaging	Reference
All terrain generators	EC2000/K1/K2	98079-56876	BPR6ES			17210-ZE1-505		16955-ZE1-010
	EC2100C	98079-56846	BPR6ES			17211-ZL8-023	Blister	16952-ZA8-800
	EC2200/K1/K2/K3	98079-55846	BPR6ES	98079-56855	W20EPR-U	17210-ZE1-505		16955-ZE1-010
	EC3600	98079-56846	BPR6ES			17210-ZE3-505		16955-ZE1-010
	EC3600K1	98079-56846	BPR6ES			17210-ZE2-515		16955-ZE1-010
	EC4000/K1/K2	98079-55846	BPR5ES			17210-ZE3-505		16955-ZE1-010
	EC5000/K1	98079-56846	BPR6ES			17210-ZE3-505		16955-ZE1-010
	EC6000/K1/K2	98079-56846	BPR6ES			17210-ZE3-505		16955-ZE1-010
	ECM2800/K1	98079-56846 98079-55846	BPR5ES BPR6ES	98079-55855 98079-56855	W16EPR-U W20EPR-U	17211-ZB2-000		16952-KJ9-752
	ECM2800K2	98079-56846	BPR6ES			17211-ZB2-000		16952-KJ9-752
	ECM2800K3	98079-56846	BPR6ES			17211-ZB2-000		16952-KJ9-752
	ECM2800K4	98079-56846	BPR6ES			17211-ZB2-000		16952-KJ9-752
	ECT6500	98079-56846	BPR6ES	98079-56855	W20EPR-U	17210-ZE3-505		16955-ZE1-010
	ECT7000	98079-56846	BPR6ES			17210-ZE3-505		16955-ZE1-010
	ECT7000K1	98079-56846	BPR6ES			17210-ZE3-505		16955-ZE1-010
	ECMT6500/K1/K2	98079-56846	BPR6ES	98079-56855	W20EPR-U	17211-899-000		16952-KJ9-752
	ECMT7000/K1	98079-56846	BPR6ES			17211-899-000		16952-KJ9-752

(Subject to stock availability)

X10 Note: this reference is packaged in units of

MULTIPACK Multipack available: see p. 10

Generator sets

Engine parts

AVR generator

		NGK spark plug			Nippon Denso spark plug			Air filter	Fuel filter	
		Reference	Info	Serial No.	Reference	Info	Serial No.	Reference	Reference	Version
AVR generators	EG3600CL	98079-55876	BPR5ES					17211-899-000	16952-ZA0-000	
	EG4500CL	98079-55876	BPR5ES					17211-899-000	16952-ZA0-000	
	EG5500CL	98079-55876	BPR5ES					17211-899-000	16952-ZA0-000	
	EM3100CX/CX1	98079-55846 X10	BPR5ES		98079-55855	W16EPR-U		17211-899-000	16952-KJ9-752	
	EM4500CX/CX1/ CXS/CXS1	98079-55846 X10	BPR5ES		98079-55855	W16EPR-U		17211-899-000	16952-KJ9-752	
	EM4500CXS2	98079-55876	BPR5ES					17211-ZBH-W00	16952-KJ9-752	
	EM5500CX/CXS	98079-55846 X10	BPR5ES		98079-55855	W16EPR-U		17211-899-000	16952-KJ9-752	
	EM5500CX1/CXS1	98079-55846 X10	BPR5ES		98079-55855	W16EPR-U		17211-899-000	16952-KJ9-752	
	EM5500CXS2	98079-55876	BPR5ES					17211-ZBH-W00	16952-KJ9-752	
	EX4000S/K1	98079-55145 X10 98079-55846	BPR5ES-11 BPR5ES	S: ~1253117 SK/1: 1253118~	98079-55155 98079-55855	W16EPR-U11 W16EPR-U	S/~1253117 S/K1/1253118	17211-899-000	16952-ZB7-000	
	EX4500S/K1	98079-55145 X10 98079-55846	BPR5ES-11 BPR5ES	S: ~1253117 S/K1: 1253118~	98079-55155 98079-55855	W16EPR-U11 W16EPR-U	S/~1253117 S/K1/1253118	17211-899-000	16952-ZB7-000	
	EX5500/K1/K2	98076-56917 98076-56717	BPR6HS-10 BPR6HS	K0 K1/K2	98076-56927	W20FPR-U10	K0	17210-ZA0-505	16952-890-690 16952-ZA0-000	K0/K1 K2

(Subject to stock availability)

Cycloconverter and inverter generator

		NGK spark plug		Nippon Denso spark plug			Air filter	Fuel filter
		Reference	Info	Reference	Info	Serial No.	Reference	Reference
Cycloconverter and inverter generators	EX7			98056-55757 X10 98056-54757	U16FSR-UB U14FSR-UB	~1113036 1113037~	17211-ZT3-000	16952-ZA8-800
	EX7K1			98056-54757	U14FSR		17211-ZT3-000	16952-ZA8-800
	EU10i			98056-55757 X10 98056-54757	U16FSR-UB U14FSR-UB	~1113036 1113037~	17211-ZT3-000	16952-ZA8-800
	EU10iK1	31914-Z8Y-003	LR4C-E				17211-ZT3-000	16952-ZA8-800
	EU20i	98056-55777	CR5HSB				17211-Z07-000 17218-Z07-000	16952-ZA8-800
	EU20iK1			98056-55757	U16FSR		17211-Z07-000	16952-ZA8-800
	EU26i	98079-55846 X10	BPR5ES	98079-55855 X10	W16EPR-U		17211-ZS9-A02	16952-KJ9-752
	EU26iK1	98079-55876	BPR5ES	98079-55855	W16EPR-U		17211-ZS9-A02	16952-KJ9-752
	EU30i/K1	98079-56846 X10	BPR6ES	98079-56855	W20EPR-U		17211-Z28-000	16952-ZA8-800
	EU30is/is1	98079-55846 X10	BPR5ES	98079-55855	W20EPR-U		17211-ZS9-A02	16952-KJ9-752
	EM50/K1/K2/K3	98079-56846 X10	BPR6ES	98079-55855	W20EPR-U		17211-ZS9-A02	
	EM50is/is1	98079-55846 X10	BPR5ES	98079-55855	W16EPR-U		17211-Z11-000	16952-KJ9-752
	EU65is	98079-55846 X10	BPR5ES	98079-55855	W16EPR-U		17211-Z11-000	16952-KJ9-752
	EM65is/is1	98079-55846 X10	TBPR5ES	98079-55855	W16EPR-U		17211-Z11-000	16952-KJ9-752
	EM70is	98079-55846 X10	BPR5ES	98079-55855	W16EPR-U		17211-Z11-000	16952-KJ9-752

(Subject to stock availability)

X10 Note: this reference is packaged in units of

MULTIPACK Mullipack available: see p. 10

Generator sets

Engine parts

		Complete recoil starters			Starter cord
		Reference		Colour	Reference
All terrain generators	EC2000K1	28400-ZH8-033ZG		Black	28462-ZH8-003
	EC2000K2	28400-Z4M-003ZC		Black	28462-ZH8-003
	EC2100C	28400-ZL8-023ZA	MULTIPACK	Black	
	EC2200	28400-ZH8-013ZG		Black	
	EC2200K3	28400-ZH8-033ZG		Black	28462-ZH8-003
	EC3600	28400-ZE2-W02ZG		Black	28462-ZE2-W11
	EC3600K1	28400-Z5K-013ZB	MULTIPACK		28462-ZE2-W11
	EC4000	28400-ZE2-W02ZN	MULTIPACK	Bright red	28462-ZE2-W11
	EC4000K1/K2	28400-ZE2-W02ZG		Black	28462-ZE2-W11
	EC5000	28400-ZE3-W02ZH		Black	28462-ZE3-W01
	EC5000K1	28400-Z5T-013ZB		Black	28462-ZE3-W01
	EC6000	28400-ZE3-W02ZB		Black	28462-ZE3-W01
	EC6000K1/K2	28400-ZE3-W02ZH		Black	28462-ZE3-W01
	ECM2800/K1	28400-ZH8-013YA	MULTIPACK	Bright red	28462-ZH8-003
	ECM2800K2/K3	28400-ZH8-033ZB	MULTIPACK	Black	28462-ZH8-003
	ECM2800K4	28400-Z4M-003ZC		Black	28462-ZH8-003
	ECT6500	28400-ZE3-W02ZB		Black	28462-ZE3-W01
	ECT7000	28400-ZE3-W02ZH		Black	28462-ZE3-W01
	ECT7000K1	28400-Z5T-013ZB			28462-ZE3-W01
	ECMT6500/ K1/K2	28400-ZE3-W02ZB		Black	28462-ZE3-W01
	ECMT7000	28400-ZE3-W02ZB		Black	28462-ZE3-W01
	ECMT7000K1	28400-Z5T-013ZB		Black	28462-ZE3-W01

(Subject to stock availability)

		Complete Recoil starters		Starter cord
		Reference	Colour/Charact.	Reference
AVR generators	EG3600CL	28400-Z1D-E22ZA	Black	
	EG4500CL	28400-Z1C-E22ZA	Black	
	EG5500CL	28400-Z1C-E22ZA	Black	
	EM3100CX/CX1	28400-ZE2-W02ZB	Black	28462-ZE2-W11
	EM4500CX/CX1/CXS/ CXS1	28400-ZK3-013ZA	Black	28462-ZK3-003
	EM4500CXS2	28400-Z1C-D42ZB	Black	28462-ZE3-W01
	EM5500CX/CXS	28400-ZK3-013ZA 31210-ZE3-023	Black starter (CX/CXS) Starter motor (CXS)	28462-ZK3-003
	EM5500CX1/CXS1	28400-ZK3-013ZA	F	28462-ZK3-003
		28400-Z7E-003ZA	FH	28462-Z2E-003
	EM5500CXS2	31200-Z5T-W01	Starter motor	
	EX4000S/K1	31210-ZB8-023	Starter motor	
	EX4500S/K1	31210-ZB8-023	Starter motor	
	EX5500/K1/K2	31200-ZA0-701	Starter motor	
Generator sets cycloconverter and inverter	EX7	28400-Z11-003		
	EX7K1	28400-ZT3-P11		28462-ZT3-P11
	EU10i	28400-ZT3-003		28462-ZT3-003
	EU10iK1	28400-ZT3-P11		28462-ZT3-P11
	EU20i	28400-Z07-004		28462-Z07-004
	EU20iK1	28400-Z07-004		28462-Z07-004
	EU26i/K1	28400-ZS9-C01ZB	Black	28462-ZH8-003
	EU30i/K1	28400-Z28-013		28462-Z28-003
	EU30is	28400-ZS9-A01 28400-ZS9-A04	~1015318 1015319~	28462-ZS9-A01
	EU30is1	28400-ZS9-A04		28462-ZS9-A01
	EM30/K1/K2	28400-ZB2-C03ZE		28462-ZH8-003
	EM30K3	28400-ZS9-C01ZB		28462-ZH8-003
	EM50is/is1	28400-Z11-003		28462-ZK3-003
	EU65is	28400-Z11-003		28462-ZK3-003
	EM65is/is1	28400-Z11-003		28462-ZK3-003
	EM70is	28400-Z11-003		28462-ZK3-003

(Subject to stock availability)

	Battery
	Reference
EM4500CX/CXS EM5500CX/CXS	31500-ST3-101HE
EX4000S/K1 EX4500S/K1	31500-738-731
EX5500	31500-ZA0-653
EX7/EM50is/EM70is/ EM65is/EU65is	31500-MCR-D02
EU30is	31500-MN4-678

(Subject to stock availability)

MULTIPACK Multipack available: see p. 10

Snow blowers

Accessories and maintenance

THINK ABOUT !

Using a tarp cover to strore your machine!

Headlamp kit		
Model	Reference	Type
HS522, HS622	06350-767-100AH	Type T
HS624, HS1390I	06350-768-000AH	Type T

(Subject to stock availability)

Covers		
	Size	Reference
HS550, HS622, HS624, HS724, HSS655, HSS760	Size S	06310-SNOW-SMALL
HS970, HSS970, HSS1380	Size M	06310-SNOW-MEDIUM
HSM1180i, HSM1380, HSM1390, HSM1390i HSM1590, HSM1590i, HSS 1380i	Size L	06310-SNOW-LARGE

(Subject to stock availability)

Crawlers		
	Reference	Dimensions
HS522, HS622, HSS655	42755-743-013	12-60 x 16
HS624, HS724, HS760	42755-738-E02	12-60 x 20B
HS828, HS928, HS970, HSS970, HS1132 HS1180, HSS1380	42755-768-013	12-60 x 21
HS980, HS1180I, HSM1180I, HSM1380i HSM1390i, HSM1390iK1, HSM1590i, HS1390i	42755-V15-013	18-60 x 30
HS1136, HS1390Z	42755-766-003	60P x 29L
HS1340Z, HS1810Z	42755-756-013	20-72 x 35
HS2411	42755-797-B02	23-72 x 35
HSS1380i	42755-V21-013	14-60 x 23

(Subject to stock availability)

❶

❷

❶

❷

PRO Honda fuel stabiliser and carburettor cleaner		
Reference	Description	Packaging
❶ 08CXZ-FSC-250	Fuel Stabiliser	12 bottles of 240 ml
❷ 08CAD-CCL-400	Carburettor Cleaner	12 aerosols of 400 ml

Rapidon 6 fuel can	
Reference	Packaging
01296-RAP-505	Pack of 5
01296-RAP-DIS	Pack of 15 + display box

(Subject to stock availability)

Honda OptiMate Pack		Hona OptiMate	
Reference	Packaging	Reference	Description
❶ 08M51-EWA-835E	Honda OptiMate + display box 1: - 3 x Honda OptiMate 3+ - 3 x Honda OptiMate 5 - 1 x display (can contain up to 3 OptiMate)	❷ 08M51-EWA-802Z	OptiMate 3+*
❶ 08M51-EWA-850E	Honda OptiMate + display box 2: - 6 x Honda OptiMate 5 - 1 x display (can contain up to 3 OptiMate)	❷ 08M51-EWA-800E	OptiMate 5**

* For lead/acid batteries from 2 to 32 Ah
** For lead/acid batteries from 7 to 120 Ah

Snow blowers

Chassis parts

THINK ABOUT IT!

See accessories on p. 73

					MACHINE PROTECTION SYSTEM						
					Turbine kit			Auger kit			
	Crawlers		Headlamp kit		Safety bolt	Nut	Blower kit	Fasteners	Safety bolt	Auger	
	Reference	Dimensions	Reference	Type	Reference	Reference	Reference	Reference	Reference	Reference	Info
HS55					90102-732-010	90115-SA0-000				72401-732-000 72402-732-000	D G
HS70										72401-732-000 72402-732-000	D G
HS80					90102-732-010	90114-SA0-000				72401-732-000 72402-732-000	D G
HS520										72410-V10-000	
HS522	42755-743-013	12-60 x 16	06350-767-100AH	T	95801-0803500	90114-SA0-000	90309-428-731		90309-428-731	72401-743-000 72402-743-000	D G
HS550						90114-SA0-000				72410-V10-000	
HS622	42755-743-013	12-60 x 16	06350-767-100AH	T	95801-0803500	90309-428-731	95801-0603500		90114-SA0-000	72401-743-000 72402-743-000	D G
HS624	42755-738-E02	12-60 x 20B	06350-768-000AH	T	90102-732-010	90114-SA0-000	95701-0601600	06901-767-000	90114-SA0-000 94001-062000S	72410-767-010 72450-767-010	D G
HSS655	42755-743-013	12-60 x 16									
HS724	42755-738-E02	12-60 x 20B			90102-732-010	90114-SA0-000	95701-0601600		90114-SA0-000 94001-062000S	72410-767-010 72450-767-010	D G
HS760	42755-738-E02	12-60 x 20B			90102-732-010	90114-SA0-000	95701-0601600		90114-SA0-000 94001-062000S	72410-767-010 72450-767-010	D G
HS828	42755-768-013	12-60 x 21			90102-732-010	90114-SA0-000	95701-0601600		90114-SA0-000 94001-062000S	72410-768-010 72450-768-010	D G
HS928	42755-768-013	12-60 x 21			90102-732-010	90114-SA0-000			90114-SA0-000	72410-768-010 72450-768-010	D G
HS970	42755-768-013	12-60 x 21			90102-732-010 95701-0805000	90114-SA0-000 94050-08000	95701-0601600		90114-SA0-000	72410-768-010 72450-768-010	D G
HSS970	42755-768-013	12-60 x 21			92101-060180A	90114-SA0-000			92101-060180A	72410-768-010 72450-768-010	D G
HS980	42755-V15-013	18-60 x 30			95701-0805000	94050-08000				72410-V15-003 72450-V15-003	D G
HS1132	42755-768-013	12-60 x 21			90102-732-010	90114-SA0-000			90114-SA0-000	72410-V03-010 72450-V03-010	D G
HS1136	42755-766-003	60P x 29L			95701-0805000	94050-08000	93402-0802500	06957-766-000	94111-08000 94030-08000	80030-762-505 80029-766-003	D G
HS1180	42755-768-013	12-60 x 21			90102-732-010 95701-0805000	90114-SA0-000 94050-08000			90114-SA0-000	72410-V03-010 72450-V03-010	D G
HS1180i	42755-V15-013	18-60 x 30								72410-V15-003 72450-V15-003	D G

(Subject to stock availability)

Snow blowers

Chassis parts

					MACHINE PROTECTION SYSTEMS						
					Turbine kit			Auger kit			
	Crawlers		Headlamp kit		Safety bolt	Nut	Blower kit	Fasteners	Safety bolt	Auger	
	Reference	Dimensions	Reference	Type	Reference	Reference	Reference	Reference	Reference	Reference	Info
HS1340Z	42755-756-013	20-72 x 35								80085-756-003 80084-756-003	D G
HS1390Z	42755-766-003	60P x 29L			95701-0805000	94050-08000	93402-0802500	06957-766-000	94111-08000	72410-V15-801 72450-V15-801	D G
HS1390i	42755-V15-013	18- 60 x 30	06350-768-000AH	T						72410-V15-801 72450-V15-801	D G
HS1810Z	42755-756-013	20-72 x 35B			95701-0805000 92101-080250A	94050-08000 80108-797-003	80817-762-003		94111-08000 80090-798-003	80195-797-003 80194-797-003	D G
HS2411	42755-797-B02	23-72 x 35			95701-0805000 92101-080250A 80085-798-003	94050-08000 80108-797-003 80108-797-003	80817-762-003		94111-08000 80090-798-003	80260-797-003 80259-797-003	D G
HSM1180i	42755-V15-0 13	18-60 x 30			90106-V15-003	94050-08000		06957-V15-F00	95701-0802500	72410-V15-F01 72450-V15-F01	D G
HSM1380i	42755-V15-013	18-60 x 30	33100-743-701		92101-08025-0A	90115-659-003	06921-V15-F00	06957-V15-F00	95701-0802500	72410-V15-F01 72450-V15-F01	D G
HSM1390i	42755-V15-013	18-60 x 30			90106-V15-003	94050-08000		06957-V15-F00	95701-0802500	72410-V15-E01 72450-V15-E01	D G
HSM1390iK1	42755-V15-013	18-60 x 30	38200-V15-701				06921-V15-F00	06957-V15-F00	95701-0802500	72410-V15-E01 72450-V15-E01	D G
HSM1590i	42755-V15-013	18-60 x 30			90106-V15-003	94050-08000		06957-V15-F00	95701-0802500	72410-V15-E01 72450-V15-E01	D G
HSS1380i	42755-V21-013	14-60 x 23			95701-0803500	90309-428-731	92101-060-200A	79300-V21-013	90114-SA0-000	72400-V21-821 72405-V21-821	D G
HSS1380	42755-768-013	12-60 x 21			92101-060180A	90114-SA0-000			92101-060180A	72410-V03-010 72450-V03-010	D G

(Subject to stock availability)

Power Carriers

Accessories and maintenance

Headlamp kit	
Model	Reference
HP250/K1/K2/K3, HP300* HP350, HP400/K1/K2/K3*	31100-ZE1-811 (Steering wheel)
	31510-ZE1-711 (Lamp coil)
	90015-883-000 x 2 (Screws)

*Commercially available headlamp

(Subject to stock availability)

Crawlers		
Model	Reference	Dimensions
HP250/K1/K2	42755-740-003ZA	
HP250K3	42755-740-C41	18-60 x 34
HP300/HP350	42755-V22-642	16-60 x 34
HP400/K1/K2/K3, HP450	42755-742-000ZA	16-60 x 34
HP500/K1/K2	42755-742-000ZA	16-60 x 34

(Subject to stock availability)

Hydrostatic transmission oil for power carriers	
Reference	Packaging
08208-99902-HE	1l bottle

(Subject to stock availability)

PRO Honda fuel stabiliser and carburettor cleaner		
Reference	Description	Packaging
❶ 08CXZ-FSC-250	Fuel stabilizer	12 bottles of 240 ml
❷ 08CAD-CCL-400	Carburettor Cleaner	12 aerosols of 400 ml

Rapidon 6 fuel can	
Reference	Packaging
01296-RAP-505	Pack of 5
01296-RAP-DIS	Pack of 15 + display box

(Subject to stock availability)

Power Carriers

Engine parts

The Honda rubber **tracks** are strong and give the power carrier a strong grip on all types of terrain (sand, mud, snow), even on steep slopes (up to 25° climbing and up to 15° descending). The tracks are also ecological because they limit damage to soil in mushroom farms, around vines, or on mountains.

	NGK spark plug		Nippon Denso spark plug		Air filter	Starter cord		Crawlers	
	Reference	Info	Reference	Info	Reference	Reference	Engine Serial No.	Reference	Dimensions
HP250/K1/K2	98073-54744	BMR4A	98073-54754	W14MR-U	17211-ZG1-750	28462-ZG1-004		42755-740-003ZA	
HP250K3	98073-54744	BMR4A			17211-ZG1-750	28462-ZG1-004		42755-740-C41	18-60 x 34
HP300	98079-54846	BPR4ES	98079-54855	W14EPR-U	17210-ZE6-505 MULTIPACK	28462-ZH0-003		42755-V22-642	16-60 x 34
HP350	98079-54846	BPR4ES	98079-54855	W14EPR-U	17210-Z1V-003	28462-Z1V-801 28462-Z1V-G01	~ 1112092 = 2360 mm 1112093 ~= 1850 mm	42755-V22-642	16-60 x 34
HP400/K1/K2/K3	98079-54846	BPR4ES	98079-54855	W14EPR-U	17210-ZE6-505 MULTIPACK	28462-ZH0-003		42755-742-000ZA	60P x 37L
HP450	98079-54846	BPR4ES	98079-54855	W14EPR-U	17210-Z1V-003	28462-Z1V-801 28462-Z1V-G01	~ 1112092 = 2360 mm 1112093 ~= 1850 mm	42755-742-000ZA	60P x 37L
HP500H	98079-56846 X10	BPR6ES	98079-56855	W20EPR-U	17211-ZE1-000	28462-ZH8-003		42755-742-000ZA	60P x 37L
HP500HK1/K2	98079-56846 X10	BPR6ES	98079-56855	W20EPR-U	17211-ZE1-000	28462-ZH8-003		42755-742-000ZA	60P x 37L

(Subject to stock availability)

X10 Note: this reference is packaged in units of 10.

MULTIPACK Multipack available: see p. 10

Water pumps

Engine parts

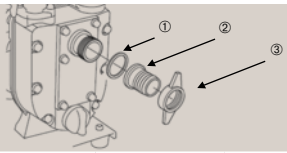

	NGK spark plug		Nippon Denso spark plug		Air filter		Recoil starter	Filter	Fitting complete	Seal fitting ①	Fitting ②	Lug fitting ③
	Reference	Info	Reference	Info	Reference	Pack.	Reference	Reference	Reference	Reference	Reference	Reference
WA10	98073-54744	BMR-4A	98073-54754	W14MR-U	17211-896-000			78325-YB0-711				
WA15	98073-54744	BMR-4A	98073-54754	W14MR-U	17211-896-000			78325-YB0-751				
WB10	98073-54744	BMR-4A	98073-54754	W14MR-U	17211-896-000		28400-ZG0-003ZC	78325-YB0-711		78313-YB0-710	78311-YB0-710	78312-YB0-711
WB15	98073-54744	BMR-4A	98073-54754	W14MR-U	17211-896-000							
WA20	98076-56716	BR6HS			17211-883-010			78325-954-000		78313-954-000	78311-954-010	78312-954-010
WA20X	98079-56846 X10	BPR6ES	98079-56855	W20EPR-U	17211-ZE1-000		28400-ZE1-003ZF	78325-954-000		78313-954-000	78311-954-010	78312-954-010
WB20X	98079-56846 X10	BPR6ES	98079-56855	W20EPR-U	17211-ZE1-000		28400-ZE1-003ZF	78325-YB3-010	78310-YB3-000	78313-YB3-000	78311-954-010	78312-YB3-000
WB20XT	98079-56846 X10	BPR6ES			17211-ZE1-000		28400-ZH8-013YA MULTIPACK	78325-YG3-000		78313-YB3-000	78311-954-010	78312-YG3-000
WB30X	98079-56846 X10	BPR6ES	98079-56855	W20EPR-U	17211-ZE1-000		28400-ZE1-003ZF	78325-YB4-020		78313-YB4-010	78311-YB4-010	78312-YB4-000
WB30XK1	98079-56846 X10	BPR6ES	98079-56855	W20EPR-U	17211-ZE1-000		28400-ZH8-013YA MULTIPACK	78325-YB4-020		78313-YB4-010	78311-YB4-010	78312-YB4-000
WB30XT	98079-56846 X10	BPR6ES			17211-ZE1-000		28400-ZH8-013YA MULTIPACK	78325-YG4-000		78313-YB4-010	78311-YB4-010	78312-YG4-000
WB-D40					17210-ZG3-505		28400-ZG3-014ZA	78325-YD6-631		78313-YD4-631	78311-YD4-631	78312-YD4-631
WH15X	98079-56846 X10	BPR6ES	98079-56855	W20EPR-U	17211-ZE1-000		28400-ZE1-003ZF	78325-YB7-020		78313-YB0-760	78311-YB0-760	78312-YB0-761
WH15XK1	98079-56846 X10	BPR6ES	98079-56855	W20EPR-U	17211-ZE1-000		28400-ZH8-013YA MULTIPACK	78325-YB7-020		78313-YB0-760	78311-YB0-760	78312-YB0-761
WH15XK2	98079-56846 X10	BPR6ES	98079-56855	W20EPR-U	17211-ZE1-000		28400-Z4M-003ZA	78325-YB7-020		78313-YB0-760	78311-YB0-760	78312-YB0-761
WH20X	98079-56846 X10	BPR6ES	98079-56855	W20EPR-U	17211-ZE1-000		28400-ZE1-003ZF	78325-YB7-702		78313-YB3-000	78311-954-010	78312-YB3-000
WH20XK1	98079-56846 X10	BPR6ES	98079-56855	W20EPR-U	17211-ZE1-000		28400-ZH8-013YA MULTIPACK	78325-YB7-702		78313-YB3-000	78311-954-010	78312-YB3-000
WH20XK2	98079-56846 X10	BPR6ES	98079-56855	W20EPR-U	17211-ZE1-000		28400-Z4M-003ZA					
WMP20X	98079-56846 X10	BPR6ES	98079-56855	W20EPR-U	17210-ZE1-505 MULTIPACK		28400-ZH8-013YA MULTIPACK					
WN20	98079-56846 X10	BPR6ES			17211-ZL8-023 MULTIPACK	Blister	28400-ZL8-023ZC	78327-YF3-702 78326-YF3-702		78313-YF3-702	78311-YF3-702	78312-YF3-702
WP20X	98079-56846 X10	BPR6ES	98079-56855	W20EPR-U	17211-ZE1-000		28400-ZH8-013YA MULTIPACK	78325-YE5-003	78311-YE5-003			
WP30X	98079-56846 X10	BPR6ES	98079-56855	W20EPR-U	17211-ZE1-000		28400-ZH8-013YA MULTIPACK	78325-YE6-003	78311-YE6-003			
WT20XK1	98079-56846 X10	BPR6ES	98079-56855	W20EPR-U	17210-ZE1-505 MULTIPACK		28400-ZE1-003ZF	78325-YB8-631		78313-YB8-631	78311-YB8-631	78312-YB8-631
WT20XK2	98079-56846 X10	BPR6ES	98079-56855	W20EPR-U	17210-ZE1-505 MULTIPACK		28400-ZH8-013YA MULTIPACK	78325-YB8-631		78313-YB8-631	78311-YB8-631	78312-YB8-631
WT20XK3	98079-56846 X10	BPR6ES	98079-56855	W20EPR-U	17210-ZE1-505 MULTIPACK		28400-ZH8-013YA MULTIPACK	78325-YG0-621				
WT30X	98079-56846 X10	BPR6ES	98079-56855	W20EPR-U	17211-ZE2-000 MULTIPACK							
WT30XK1	98079-56846 X10	BPR6ES	98079-56855	W20EPR-U	17210-ZE2-515 MULTIPACK		28400-ZE2-003ZF	78325-YB9-631		78313-YB9-631	78311-YB9-631	78312-YB9-631
WT30XK2	98079-56846 X10	BPR6ES	98079-56855 X10	W20EPR-U	17210-ZE2-515 MULTIPACK		28400-ZE2-W02ZN MULTIPACK	78325-YB9-631		78313-YB9-631	78311-YB9-631	78312-YB9-631
WT30XK3	98079-56846 X10	BPR6ES	98079-56855 X10	W20EPR-U	17210-ZE2-515 MULTIPACK		28400-ZE2-W02ZN MULTIPACK	78325-YG1-621				
WT40XK2	98079-56846 X10	BPR6ES	98079-56855	W20EPR-U	17210-ZE3-505 MULTIPACK		28400-ZE3-W02ZP MULTIPACK			78313-YG2-621	78311-YG2-622	78312-YG2-622
WT-D30					17210-ZG3-505		28400-ZG3-014ZA	78325-YB9-631		78313-YB9-631	78311-YB9-631	78312-YB9-631
WT-D40					17210-ZG3-505		28400-ZG3-014ZA	78325-YD4-631		78313-YD4-631	78311-YD4-631	78312-YD4-631
WX10K1 (GX25)	31915-Z0H-003	CMR5H			17211-Z0H-000		28400-Z0H-003 MULTIPACK	78325-YB0-711		78178-YE9-800	78311-YB0-710	78312-YE9-000
WX10 (GX31)			98056-55757	UF16FSR	17211-ZM3-000		28400-ZM3-003ZA	78325-YB0-711		78178-YE9-800	78311-YB0-710	78312-YE9-000
WX15			98056-55757	UF16FSR	17211-ZM7-000		28400-ZM7-003 MULTIPACK	78325-YB0-751		78313-YF2-000	78311-YF2-000	78312-YF2-000

(Subject to stock availability)

X10 Note: this reference is packed in packs of 10.

MULTIPACK Multipack available: see p. 10

Engine models

On each drawing you will find an arrow indicating the position of the engine model code and serial number.

G100/150/200

GC135/160/190 - GS160/190

GX22/31

GX25/35

GXH50

GX100

GX110/120/140/160/200/
240/270/340/390

GX360K1 - GX640

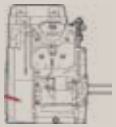
GX610/620/670

GX630/660/690

GV100

GXV630/660/690

GX440

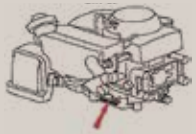
GXV50/57

GXV120/140/160

GCV135/160/190 - GSV160/190

GXV270/340/390

CV520/530 - GXV520/530

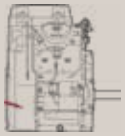
GXV610/620/670

Engine	Model code	Serial No.	
		From	To
G100	G100	1000001	1490769
G100K1	G100	2000001	2424874
G100K2	G100	3000001	9999999
G150	G150	1000001	2017901
G150	G150	6000001	6754925
G150K1	G150	9100001	9423040
G200	G200	1000001	2344556
G200	G200	6000001	7308945
G200K1	G200	9100001	9954893
GC135	GCAJ	1000001	9999999
GC135E	GCAAE	1000001	9999999
GC135LE	GCAAE	1000001	9999999
GC135UE	GCACE	1000001	1999999
GC160	GCAH	1000001	1999999
GC160A	GCAHA	1000001	5500000
GC160A	GCAHA	8000001	8043020
GC160E	GCABE	1000001	9999999
GC160LA	GCAHA	1000001	5600000
GC160LE	GCABE	1000001	9999999
GC160UE	GCADE	1000001	1999999
GC190A	GCAAA	1000001	9999999
GC190LA	GCAAA	1000001	2400000
GCV135	GJAF	1000001	9999999
GCV135E	GJAFE	1000001	9999999
GCV135LE	GJAFE	2887875	9999999
GCV135UE	GJABE	1000001	1999999
GCV160	GJAE	1000001	9999999
GCV160A	GJAEA	1000561	9999999
GCV160A0	GJAPA	1000001	2000000
GCV160E	GJAAE	1000001	9999999
GCV160LE	GJAAE	2075804	9999999
GCV160UE	GJACE	1000001	1999999
GCV160LA	GJAEA	1000001	7146161
GCV160LA0	GJARA	1000001	4040000
GCV190A	GJAAA	1000003	9999999
GCV190LA	GJAAA	1000003	6600000
GCV520	GJAKM	1000001	1999999
GCV520U	GJABK	1000001	1999999

Engine	Model code	Serial No.	
		From	To
GCV520R	GJABK	1000001	1999999
GCV530	GJAJM	1000001	1999999
GCV530	GJAMM	1000001	1999999
GCV530U	GJADK	1000001	1999999
GCV530R	GJADK	1000001	1999999
GS160A	GCABA	1000001	9999999
GS190A	GCACA	1000001	9999999
GSV160A	GJABA	1000001	9999999
GSV190A	GJACA	1000001	4500000
GSV190LA	GJACA	1000001	4510000
GV100K1	GV100	2000001	9999999
GV100K2	GV100	9100001	9316038
GX22	GCAF	1000001	9999999
GX25	GCAAM	1000001	1999999
GX25	GCABM	1000001	1999999
GX25	GCABK	1000001	1999999
GX25N	GCADK	1000001	1999999
GX25N	GCAVK	1000001	1999999
GX25NT	GCART	1000001	1999999
GX25T	GCAPT	1000001	1999999
GX25T	GCANT	1000001	9999999
GX25T	GCALT	1000001	9999999
GX25U	GCADK	1000001	1999999
GX31	GCAG	1000001	1999999
GX35	GCACM	1000001	1999999
GX35N	GCAEK	1000001	1999999
GX35NT	GCAST	1000001	1999999
GX35T	GCAMT	1000001	9999999
GX35U	GCAEK	1000001	1999999
GX100	GCANM	1000001	1999999
GX100U	GCAGK	1000001	1999999
GX110	GX110	1000001	2454428
GX120	GC01	1000001	1999999
GX120K1	GC01	2000001	9999999
GX120U1	GCAHK	1000001	1999999
GX120T1	GCAAT	1000001	9999999
GX120T2	GCBNT	1000001	1999999
GX120UT1	GCAGT	1000001	1999999

Engine models

Engine	Model code	Serial No.	
		From	To
GX120UT2	GCBMT	1000001	1999999
GX120RT2	GCBMT	1000001	1999999
GX140	GX140	1000001	3263982
GX160	GDAA	1000001	1091797
GX160H1	GCAAH	1000001	2999999
GX160K1	GC02	2000001	9999999
GX160K1J	GCAAK	1000001	1999999
GX160U1	GCACK	1000001	1999999
GX160T1	GCABT	1000001	9999999
GX160T2	GCBRT	1000001	1999999
GX160T2	GDAAT	1000001	1999999
GX160T2	GCBRT	1000001	1999999
GX160UT1	GCAFT	1000001	9999999
GX160UT2	GCBPT	1000001	1999999
GX160RT1	GCAFT	1000001	9999999
GX160RT2	GCBPT	1000001	1999999
GX200	GCAE	1000001	8999999
GX200U	GCAJK	1000001	1999999
GX200T	GCACT	1000001	1999999
GX200T2	GCBUT	1000001	1999999
GX200T2	GCBVT	1000001	1999999
GX200UT	GCAHT	1000001	1999999
GX200UT2	GCBTT	1000001	1999999
GX200RT	GCAHT	1000001	1999999
GX200RT2	GCBTT	1000001	1999999
GX200H	GCARH	1000001	1999999
GX240	GC04	1000001	1528199
GX240K1	GC04	3000001	9999999
GX240K2	GCBRK	1000001	1999999
GX240U1	GCAKK	1000001	1999999
GX240U2	GCBPK	1000001	1999999
GX240R1	GCAKK	1000001	1999999
GX240R2	GCBPK	1000001	1999999
GX240T1	GCAUT	1000001	1999999
GX240T2	GCBKT	1000001	1999999
GX240UT1	GCATT	1000001	1999999
GX240UT2	GCBJT	1000001	1999999
GX240RT1	GCATT	1000001	1999999
GX240RT2	GCBJT	1000001	1999999

Engine	Model code	Serial No.	
		From	To
GX270	GCAB	1000001	9999999
GX270U	GCALK	1000001	1999999
GX270U2	GCBMK	1000001	1999999
GX270R	GCALK	1000001	1999999
GX270R2	GCBMK	1000001	1999999
GX270T	GCADT	1000001	1999999
GX270T2	GCBHT	1000001	1999999
GX270UT	GCAJT	1000001	1999999
GX270UT2	GCBGT	1000001	1999999
GX270RT	GCAJT	1000001	1999999
GX270RT2	GCBGT	1000001	1999999
GX270H	GCADH	1000001	1999999
GX270UH1	GCAGH	1000001	1999999
GX340	GC05	1000001	1469766
GX340K1	GC05	3600001	3999999
GX340U1	GCAMK	1000001	1999999
GX340U2	GCBKK	1000001	1999999
GX340R1	GCAMK	1000001	1999999
GX340R2	GCBKK	1000001	1999999
GX340T1	GCAWT	1000001	1999999
GX340T2	GCBFT	1000001	1999999
GX340UT1	GCAVT	1000001	1999999
GX340UT2	GCBET	1000001	1999999
GX340RT1	GCAVT	1000001	1999999
GX340RT2	GCBET	1000001	1999999
GX340H1	GCAEH	1000001	1999999
GX360K1	GA01	1100001	1399999
GX390K1	GCAA	3400001	3999999
GX390K1	GDAAM	1100001	1999999
GX390K1	GDAAK	1000001	1999999
GX390K1	GDAF	1100001	1999999
GX390K1	GCAA	3400001	3999999
GX390K2	GCBJK	1000001	1999999
GX390U1	GCANK	1000001	1999999
GX390U2	GCBHK	1000001	1999999
GX390R1	GCANK	1000001	1999999
GX390R2	GCBHK	1000001	1999999
GX390T1	GCAET	1000001	1999999
GX390T2	GCBDT	1000001	1999999

Engine	Model code	Serial No.	
		From	To
GX670R	GCASK	1000001	1999999
GX690	GCBDK	1000001	1999999
GX690R	GCBGK	1000001	1999999
GX690H	GCALH	1000001	1999999
GX690RH	GCAPH	1000001	1999999
GXH50	GCAL	1500001	1999999
GXH50U	GCAFK	1000001	1999999
GXV50	GJAG	1100001	1999999
GXV50U	GJAAK	1000001	1999999
GXV57	GJALM	1200001	1999999
GXV57U	GJAJK	1000001	1999999
GXV120	GXV120	1000001	2999999
GXV140	GJAB	6000001	7999999
GXV160	GJ03	1000001	1366578
GXV160K1	GJ03	2000001	7999999
GXV160K1	GJ03	8100001	9999999
GXV160H2	GJAAH	1000001	1999999
GXV160UH2	GJABH	1000001	1999999
GXV160A1	GJAJA	1000014	9999999
GXV160UA1	GJAHA	1000001	9999999
GXV270K1	GJ01	2000001	2999999
GXV340	GJ02	1000001	1009980
GXV340K1	GJ02	1100001	5999999
GXV340K2	GJ02	6000001	6999999
GXV340T2	GJABT	1000001	1999999
GXV340UT2	GJACT	1000001	1999999
GXV340RT2	GJACT	1000001	1999999
GXV340A2	GJADA	1000001	1008560
GXV340UA2	GJAMA	1000001	1001080
GXV390	GJAA	1000001	2063521
GXV390K1	GJAA	6000001	6999999
GXV390T1	GJAAT	1000001	1999999
GXV390UT1	GJADT	1000001	1999999
GXV390RT1	GJADT	1000001	1999999
GXV390A1	GJAGA	1000001	1009080
GXV390UA1	GJANA	1000001	1000360
GXV520	GJAPM	1000001	1999999
GXV520U	GJACK	1000001	1999999
GXV530	GJARM	1000001	1999999

Engine models

Engine	Model code	Serial No.	
		From	To
GX390UT1	GCAKT	1000001	1999999
GX390UT2	GCBCT	1000001	1999999
GX390RT1	GCAKT	1000001	1999999
GX390RT2	GCBCT	1000001	1999999
GX390H1	GCAFH	1000001	1999999
GX390UH1	GCAHH	1000001	1999999
GX440I	GCATK	1000001	1999999
GX440IU	GCAWK	1000001	1999999
GX440IR	GCAWK	1000001	1999999
GX610	GCAC	1000001	1999999
GX610	GDAG	1000001	1999999
GX610K1	GCAC	2060001	2999999
GX610U1	GCAPK	1000001	1999999
GX610R1	GCAPK	1000001	1999999
GX620	GCAD	1000001	1999999
GX620	GDAH	1000001	1999999
GX620K1	GCAD	2000001	2999999
GX620K1	GDABM	1010001	1999999
GX620U1	GCARK	1000001	1999999
GX620U1	GDADM	1000001	1999999
GX620R1	GCARK	1000001	1999999
GX630	GCBBK	1000001	1999999
GX630R	GCBEK	1000001	1999999
GX630H	GCAJH	1000001	1999999
GX630RH	GCAMH	1000001	1999999
GX640	GAAD	1000001	1999999
GX660	GCBCK	1000001	1999999
GX660R	GCBFK	1000001	1999999
GX660H	GCAKH	1000001	1999999
GX660RH	GCANH	1000001	1999999
GX670	GCAM	1050001	1999999
GX670	GDACM	1010001	1999999
GX670U	GCASK	1000001	1999999

Engine	Model code	Serial No.	
		From	To
GXV530U	GJAEK	1000001	1999999
GXV530R	GJAEK	1000001	1999999
GXV610	GJAC	1000001	1999999
GXV610K1	GJAC	2000001	2999999
GXV610U1	GJAFK	1000001	1999999
GXV610R1	GJAFK	1000001	1999999
GXV620	GJAD	1000001	1999999
GXV620K1	GJAD	2000001	2999999
GXV620U1	GJAGK	1000001	1999999
GXV620R1	GJAGK	1000001	1999999
GXV630R	GJANK	1000001	1999999
GXV630RH	GJACH	1000001	1999999
GXV660R	GJAPK	1000001	1999999
GXV660RH	GJADH	1000001	1999999
GXV670	GJAH	1000001	1999999
GXV670U	GJAHK	1000001	1999999
GXV670R	GJAHK	1000001	1999999
GXV690	GJAMK	1000001	1999999
GXV690R	GJARK	1000001	1999999
GXV690RH	GJAEH	1000001	1999999

Fuel supply systems

Tank cap		
Engine	Reference	Photo reference
G100	17620-ZH7-023	
G150	17620-ZH7-023	
G200	17620-ZH7-023	
GC135	17620-ZL8-023	❷
GC160	17620-ZL8-023	❷
GC190	17620-ZL8-023	❷
GCV135	17620-ZL8-023	❷
GCV160	17620-ZL8-023	❷
GCV190	17620-ZL8-023	❷
GSV160	17620-ZL8-023	❷
GSV190	17620-ZL8-023	❷
GV100	17620-ZL8-023	❷
GX120	17620-Z0T-813	❶
GX160	17620-Z0T-813	❶
GX200	17620-Z0T-813	❶
GX240	17620-Z0T-813	❶
GX270	17620-Z0T-813	❶
GX340	17620-Z0T-813	❶
GX390	17620-Z0T-813	❶
GXH50	17620-ZL8-023	❷
GXV50	17620-ZL8-023	❷
GX22	17620-ZM3-817	
GX31	17620-ZM3-817	
GX25	17620-ZM3-817	
GX35	17620-ZM3-817	
GXV120	17620-ZE7-000	
GXV140	17620-ZL8-023	❷
GXV160	17620-ZE7-000	
GXV270	17620-ZE7-000	
GXV340	17620-ZE7-000	
GXV390	17620-ZE7-000	

❶

❷

❸

❹

Engine	Fuel filter		Ø of tank in mm
	Reference	Ref. Photo	
GX22, GX31	17672-Z0H-003	❸	16
GX25, GX35	17672-Z0H-003	❸	16
G100K2	17672-ZE2-W01	❹	32
G150K1	17672-ZE2-W01	❹	32
G200K1	17672-ZE2-W01	❹	32
GX120	17672-ZE2-W01	❹	32
GX160	17672-ZE2-W01	❹	32
GX200	17672-ZE2-W01	❹	32
GX240	17672-ZE2-W01	❹	32
GX270	17672-ZE2-W01	❹	32
GX340	17672-ZE2-W01	❹	32
GX390	17672-ZE2-W01	❹	32

Fuel valve			
Engine	Reference	Packaging	Ref. Photo
GCV135	04103-Z0L-000	Fuel valve and tube kit	
GCV160	04103-Z0L-000	Fuel valve and tube kit	
GCV190	04103-Z0L-000	Fuel valve and tube kit	
GSV160	04103-Z0L-000	Fuel valve and tube kit	
GSV190	04103-Z0L-000	Petrol valve and tube kit	
GCV135	16950-ZM0-003	Valve only	❺
GCV160	16950-ZM0-003	Valve only	❺
GCV190	16950-ZM0-003	Valve only	❺
GSV160	16950-ZM0-003	Valve only	❺
GSV190	16950-ZM0-003	Valve only	❺
GV100K2	16950-ZL1-000	Valve only	❺
G150, G200	16950-883-663	Valve only	❺
G150K1, G200K1	16950-883-T03	Valve only	❺

Gaskets

Engine	Set of gaskets	Head gasket	Oil pan gasket	Cover gasket	Exhaust gasket
	Reference	Reference	Reference	Reference	Reference
GV100K2		12281-ZC0-003	11381-ZL1-000	12375-ZG1-000	
GXV120	06111-ZE6-406	12251-ZE6-000	11381-ZG9-J60	12391-ZE7-M10	18381-ZE6-800
GXV140	06111-ZG9-505	12251-ZG9-000	11381-ZG9-T00	12391-ZE7-M10	18381-ZG9-M00
GXV160	06111-ZE7-406	12251-ZE7-000	11381 ZE7 M10	12391-ZE7-M10	18381-ZG9-M00
GXV160K1	061A1-ZE7-T00	12251-ZE7-000	11381 ZE7 M10	12391-ZE7-M10	18381-ZG9-M00
GXV160H2 / UH2		12251-ZE7-000	11381 ZE7 M10	12391-ZE7-M10	18381-ZE6-820
GXV270K1	06111-ZE8-405	12251-ZE8-020	11381-ZE9-801	12391-ZE8-000	18333-ZE3-801
GXV340K1	06111-ZE9-405	12251-ZE9-600	11381-ZE9-801	12391-ZE8-000	18333-ZE3-801
GXV340K2 / T2 / UT2	06111-ZE9-V01	12251-ZE9-600	11381-ZE9-801	12391-ZE8-000	18333-ZE3-801
GXV390K1		12251-ZF5-000	11381-ZE9-801	12391-ZE8-000	18333-ZE3-801
GXV390T1 / UT1		12251-ZF5-H01	11381-ZE9-801	12391-ZE8-000	18333-ZE3-801
G100K1		12281-ZG0-003	11381 ZG0 800	12375-ZG0-010	18381-ZG0-800
G100K2	06111-ZG0-406	12281-ZC0-003	11381 ZG0 800	12375-ZG0-010	18381-ZG0-800
G150		12281-887-306	11381-883-800	12375-887-000	18381-883-800
G150K1		12281-887-306	11381-883-800	12375-887-000	18381-883-800
G200		12281-883-801	11381-883-800	12375-883-000	18381-883-800
G200K1		12281-883-801	11381-883-800	12375-883-000	18381-883-800
GX120 (all except UT2)	06111-ZH7-405	12251-ZH7-800	11381-ZH7-800	12391-ZE1-000	18381-ZH8-801
GX120 UT2		12251-Z0S-801	11381-ZH7-800	12391-ZE1-000	18381-Z0T-801
G160 (all except UT2)	06111-ZH8-405	12251-Z1T-003	11381-ZL0-000	12391-ZE1-000	18381-Z1T-003
GX160 UT2		12251-ZL0-003	11381-ZH8-801	12391-ZE1-000	18381-Z0T-801
GX200 (all except UT2)	06111-ZL0-000	12251-ZL0-003	11381-ZL0-000	12391 ZE1 000	18381-ZH8-801
GX200 UT2		12251-ZL0-003	11381-ZH8-801	12391-ZE1-000	18381-Z0T-801
GX240 (all except UT2)	06111-ZE2-408	12251-ZE2-801	11381-ZE2-801	12391-ZE2-020	18381-ZE2-801
GX240 UT2		12251-Z5K-003	11381-Z5K-000	12391-ZE2-020	18333-Z1C-801
GX270 (all except UT2)	06111-ZH9-405	12251-ZH9-010	11381-ZE2-801	12391-ZE2-020	18381-ZE2-801
GX270 UT2		12251-Z5K-003	11381-Z5K-000	12391-ZE2-020	18333-Z1C-801
GX340 (all except UT2)	06112-ZE3-405	12251-ZE3-W01	11381-ZE3-801	12391-ZE2-020	18381-ZE2-801
GX340 UT2		12251-Z5T-003	11381-Z5T-000	12391-ZE2-020	18333-ZF6-W01
GX390 (all except UT2)	06111-ZF6-R81	12251-ZF6-W01	11381-ZE3-801	12391-ZE2-020	18381-ZE2-801
GX390 UT2		12251-Z5T-003	11381-Z5T-000	12391-ZE2-020	18333-ZF6-W01
GX440IU		12251-Z2E-003		12312-Z2E-000	18381-Z2E-010
GX610 / 620	061A1-ZJ1-000	12251-ZJ1-003	11381-ZJ1-000	12391-ZJ1-000	18333-ZJ1-000
GX610 / 620K1 / U1		12251-ZJ1-841	11381-ZJ1-840	12391-ZE2-020	18333-ZE3-801
GX670		12251-ZJ1-841	11381-ZJ1-840	12391-ZE2-020	18333-ZE3-801

(Subject to stock availability)

Important : engine gasket packets do not include lip seals (spiral wound gaskets)

Spark plugs and starter assemblies

	NGK spark plug		Nippon Denso spark plug	
Engine	Reference	Type	Reference	Type
G100K1	98073-54744		98073-54754	
G100K2	98073-54776			
G150K1	98076-54710		98076-54780	
G200K1	98076-54710		98076-54780	
GC135	98079-56846		98079-56855	
GC160	98079-56846		98079-56855	
GC190	98079-56846		98079-56855	
GS160	98079-56846		98079-56855	
GS190	98079-56846		98079-56855	
GX22			98056-55777	
GX31			98056-55777	
GX25	31915-Z0H-003			
GX35	31915-Z0H-003			
GXH50			98056-55777	
GX100			98056-55777	
GX120	98079-56846		98079-56855	
GX160	98079-56846		98079-56855	
GX200	98079-56846		98079-56855	
GX240	98079-56846		98079-56855	
GX270	98079-56846		98079-56855	
GX340K0	98079-55145	CDI	98079-55155	CDI
GX340K1/UT2	98079-56846		98079-56855	
GX390	98079-56846		98079-56855	
GX360K1	98076-54747			
GX440IU	98079-5787C		98079-5785C	
GX610	98079-56846		98079-56855	
GX620	98079-56846		98079-56855	
GX610K1/U1	98079-5,587V		98079-5585V	
GX620K1/U1	98079-5,587V		98079-5585V	
GX670/U	98079-5,587V		98079-5585V	

	NGK spark plug	Nippon Denso spark plug
Engine	Reference	Reference
GV100K1	98073-54744	98073-54754
GV100K2	98073-54776	
GCV135	98079-56846	98079-56855
GCV160	98079-56846	98079-56855
GCV190	98079-56846	98079-56855
GCV520	98079-56846	98079-55855
GCV530	98079-56846	98079-55855
GSV160	98079-56846	98079-56855
GSV190	98079-56846	98079-56855
GXV50/U	98056-55757	98056-55757
GXV120	98079-55846	98079-55855
GXV140	98079-55846	98079-56855
GXV160	98079-55846	98079-55855
GXV270K1	98079-55846	98079-55855
GXV340	98079-55846	98079-55855
GXV390	98079-55846	98079-56855
GXV520	98079-55846	98079-55855
GXV530	98079-55846	98079-55855
GXV610	98079-55846	98079-56855
GXV620	98079-55846	98079-56855
GXV610K1	98079-5,587V	98079-5585V
GXV620K1/U1	98079-5,587V	98079-5585V
GXV670/U	98079-5,587V	98079-5585V
GX630	98079-5587G	
GX660	98079-5587G	
GX690	98079-5587G	
GXV630	98079-5587G	
GXV660	98079-5587G	
GXV690	98079-5587G	

(Subject to stock availability)

Recoil starter			
Single starter assy	Colour	Model	Engine
28400-Z0T-003ZA	Black	New*	GX120/160/200
28400-ZH8-013YA	Red	Old*	GX120/160/200
28400-Z0T-003ZB	Red	New*	GX120/160/200
28400-ZM3-003ZA	Black		GX22/GX31
28400-Z0H-003			GX25
28400-ZM0-023ZA	Black		GCV135/160 (short cord)
28400-ZL8-023ZA	Black		GC135/160
28400-Z0M-801			GCV135/160 /190 (without starter cover)
28400-ZL8-023ZC	Red		GC135/160
28400-ZM7-003			GXH50/GXV50
28400-ZE2-W02ZN	Red		GX240/GX270
28400-Z0D-V04ZA	Black	Metal	GX100
28400-ZM0-633ZD	Red		GCV135/160 (long cord)
28400-ZM0-633ZA	Black		GCV135/160 (long cord)
28400-ZE3-W02ZP	Red		GX340/GX390/ GX610/620/670
28400-ZG9-803			GXV140/GXV160K1

* Refer to circular No. CII147 - Change of starter reference for details on the evolution of the starter.

Air filters

	Air filter					Foam pre-filter	
	Reference	Length	Width	Height	Material/Shape	Reference	Ref. Photo
G100	17211-896-000	94	76	25	Foam, rectang.		❶
G150, G200	17211-883-010	120	120	40	Foam, round		❷
G150K1, G200K1	17211-883-W21	178	89	29	Paper, rectang.	17218-883-W21	❸
GC135/160/190, GS160/190, GCV135/160/190, GSV160/190	17211-ZL8-023 MULTIPACK	133	115	21	Paper, rectang.		❸
GX25	17211-Z0H-000	76	83	20	Foam, +/- oval		❹
GX35	17211-Z0Z-000	100	70	25	Foam, +/- oval		❹
GX22, GX31	17211-ZM3-000	72	72	20	Foam, round		❺
GXH50, GXV50	17211-ZM7-000	89	89	12	Foam, square		❶
GX100	17211-ZL8-023 MULTIPACK	133	115	21	Paper, rectang.	17218-Z0D-000	❸
GX120	17210-ZE0-505(1) MULTIPACK	102	74	52	Paper, oval (foam pre-filter)	17218-ZE0-505	❻
GX160, GX200	17210-ZE1-505(1) MULTIPACK	102	74	71	Paper, oval (foam pre-filter)	17218-ZE1-507	❻
GX240, GX270	17210-ZE2-515(1) MULTIPACK	155	121	40	Paper, oval (foam pre-filter)	17218-ZE2-505	❻
GX340, GX390	17210-ZE3-505(1) MULTIPACK	112	97	92	Paper, oval (foam pre-filter)	17218-ZE3-505	❻
GX360K1	17210-ZA0-506	165	105	40	Paper, oval (foam pre-filter)		❻
GX640	06172-ZG8-L20	186	174	34	Paper, rectang.	17218-ZG8-000	❼
GX610, GX620, GXV610, GXV620	17010-ZJ1-000	238	183	32	Paper, rectang.	17218-ZJ1-000	❼
GX610K1/U1, GX620K1/U1, GX670/U, GXV610K1, GXV620K1/U1, GXV670/U	17210-ZJ1-842	225	167	30	Paper, rectang.	17218-ZJ1-840	❽
GX630, GX660, GX690	17210-Z6L-010(1)	190	190	50	Paper, round (foam pre-filter)	17218-Z6L-000	
GXV630, GXV660, GXV690	17210-Z6M-010(1)	180	135	25	Paper, rectang.	17218-Z6M-000	
GV100K1	17211-ZG1-700	130	75	25	Foam, +/- rectang.		❾
GV100K2	17211-ZL1-000	120	70	25	Foam, +/- rectang.		❾
GCV520, GCV530, GXV520, GXV530, GXV530U	17211-Z0A-013	215	120	22	Paper, rectang.	17218-Z0A-810(2)	❽
	06172-Z0A-305(3)						
GXV120	17210-ZE6-505(1) MULTIPACK	190	62	50	Paper, oval (foam pre-filter)	17218-ZE6-505	❻
GXV140	17211-ZG9-800 MULTIPACK	137	61	25	Paper, rectang.	17218-ZG9-800	❼
GXV160	17210-ZE7-505(1) MULTIPACK	190	63	45	Paper, oval (foam pre-filter)	17218-ZE6-505	❻
GXV160K1, GXV160H2, GXV160UH2	17211-ZE7-W03(1) MULTIPACK	180	62	50	Paper, oval (foam pre-filter)	17218-ZE7-W02	❻
GXV340, GXV390	17211-ZF5-V01 MULTIPACK	124	60	87	Paper, oval (foam pre-filter)	17218-ZF5-V00	❻
GX440IU	17210-Z2E-000(1)	150	100	85	Paper, oval (foam pre-filter)		❻

(Subject to stock availability)

(1) Air filter + Foam pre-filter
(2) Reference 17218-Z0A-810 is to be ordered with protective grille 17212-Z0A-000.
(3) Filter kit comprising references 17211-Z0A-013, 1728-Z0A-810 and 17212-Z0A-000.

HONDA

MULTIPACK Multipack available: see p. 10

Oil and fuel filters

Honda recommends Honda Genuine Oil HGO

Honda recommends HGO "Honda Genuine oil"

Our four stroke engine oil 10W30 API SJ is a fine mineral based oil, formulated for use with our Honda Engines Motors. High quality solvent refined base oil.

Our Synthetic oil 05W30 APJ SL JASO MA has a:

- Superior protection against engine wear at low and high operating temperatures.
- Excellent anti rust performance
- Outstanding engine cleanliness
- Reduced oil / fuel consumption

Stabiliser:

- The petrol stabiliser allows the fuel to be stored for up to 24 months.
- The use of the stabiliser facilitates starting after wintering.
- The stabiliser avoids the accumulation of deposits and varnish by keeping the carburettor and the supply circuit clean.
  Reference: 08CXZ-FSC-250
  qty 12 x 240 ML

	Oil filter		
Engine	Reference	Ø	Height
GXV340, GXV390	15400-ZJ1-004 MULTIPACK	83	82
GX610, GX620, GX670, GXV610, GXV620, GXV670	15400-ZJ1-004 MULTIPACK	83	82
GCV520, GCV530, GXV520, GXV530	15400-PFB-014	65	65
GX 640	15400-PFB-007	69	72
GX630, GX660, GX690	15400-RTA-004	65	85
GXV630, GXV660, GXV690	15400-RTA-004	65	85

(Subject to stock availability)

	Fuel filter (plastic material)			
Engine	Reference	Small Ø	Large Ø	Height
GC135, GC160, GC190	16910-ZV4-015	22	29	67
GCV520, GCV530, GXV520, GXV530	16910-ZV4-015	22	29	67
GX100, GX120, GX160, GX200, GX240, GX270, GX340, GX390	16910-GB2-005	23	30	53
GX360K1	16910-ZE8-015	22	29	65
GXV340, GXV390	16910-ZE8-015	22	29	65
GX610, GX620, GX670, GXV610, GXV620, GXV670	16910-ZE8-015	22	29	65
GX630, GX660, GX690, GXV630, GXV660, GXV690	16910-ZE8-015	22	29	65

(Subject to stock availability)

Maintenance

Tiller maintenance		
Description	Reference	Info
Transmission oil	08208-V18-211HE	FG201
	08208-V18-205HE	FG205

(Subject to stock availability)

MULTIPACK

Anti-wear grease	
Single cartridge	Pack of 12
06899-VF9-010HE	06899-VF9-010HEMP

❸

❹

❺

❻

❼

Brushcutter maintenance		
Description	Reference	Packaging
4 stroke oil 10W30 - SJ SH	08221-888-010MP	25 0.1-l sachets
Anti-wear grease	06899-VF9-010HE	

(Subject to stock availability)

❽

Ride-on mower and cultivator maintenance				
Description	Reference	Packaging	Multipack Reference	Packaging
4 stroke oil 10W30 - SJ SH	❸ 08221-888-101HE ❹ 08221-888-061HE	1l bottle 0.6l can	08221-888-101MP 08221-888-061MP	24 1l bottles 24 0.6l cans
Hydrostatic oil (HST)	❺ 08208-99902-HE	1l bottle		
4stroke Synthetic Engine oil				
Description	Reference	Packaging	Multipack Reference	Packaging
API SL 5W30 JASO MA	08221-777-060HE	0,6 l	08221-777-060MP	24 x 0,6 l
API SL 5W30 JASO MA	08221-777-100HE	1 l	08221-777-100MP	24 X 1 l
API SL 5W30 JASO MA	08221-777-400HE	4 l	08221-777-400MP	4 X 4 l

❶

❷

PRO Honda fuel stabiliser and carburettor cleaner		
Description	Reference	Packaging
Fuel Stabilizer	❶ 08CXZ-FSC-250	12 bottles of 240 ml
Carburettor Cleaner	❷ 08CAD-CCL-400	12 aerosols of 400 ml

(Subject to stock availability)

Clutch oil		
Model	Reference	Pack.
FF300 FF500	08232-P99A3LHE	1 l

(Subject to stock availability)

Fuel hoses			
Diameter	1 m	3 m	8 m
3.5 mm	95001-3500160M	95001-3500360M	
4.5 mm	95001-4500160M	95001-4500360M	95001-4500860M
5.5 mm	95001-5500160M	95001-5500360M	95001-5500860M
7.5 mm	95001-7500160M	95001-7500360M	95001-7500860M

(Subject to stock availability)

Engine maintenance GX, GC/GCV, GS		
Description	Reference	Pack contents
4-stroke engine maintenance pack for GC/GCV135/160/190/GS160/190	❻ 06211-ZL8-000 06211-ZL8-000MP	08221-888-061HE : 0.6 l oil 10W30 98079-56846 : Spark plug BPR6ES 17210-ZL8-023: Air filter Lot of 12 packs
Engine maintenance pack for GX 110/120, except types R and H	❼ 06211-ZE0-000MP	08221-888-061HE : 0.6 l oil 10W30 98079-56846 : Spark plug BPR6ES 17210-ZE0-505: Air filter - Lot of 12 packs
Engine maintenance pack for GX140/160/200, except types R and H	❼ 06211-ZE1-000MP	08221-888-0601E: 0.6 l oil 10W30 98079-56846 : Spark plug BPR6ES 17210-ZE1-505: Air filter - Lot of 12 packs
Engine maintenance pack for GX240/270, except types R and H	❽ 06211-ZE2-000MP	2 x 08221-888-061HE: 1.2 l oil 10W30 98079-56846 : Spark plug BPR6ES 17210-ZE2-515: Air filter - Lot of 12 packs
Engine maintenance pack for GX340/390, except types R and H	❽ 06211-ZE3-000MP	2 x 08221-888-061HE: 1.2 l oil 10W30 98079-56846 : Spark plug BPR6ES 17210-ZE3-505: Air filter - Lot of 12 packs

(Subject to stock availability)

Honda recommends

The OPTIMATE 12V battery charger automatically charges, recovers and maintains all lead acid batteries from 2.5 Ah to 32 Ah. It is used for lead acid batteries (standard, GEL, MF) of ride-on mowers, generators and snowblowers.

Delivered with alligator clips and charge adapter to be attached to the battery.

❶

Tools		
Description	Reference	Information
❶ Automatic 12V battery charger	08M51-EWA-802Z	Used for lead acid batteries of ride-on mowers, snowblowers and generators. Matching wall support: 08M51-OMB-RACKET
❷ Tee wrench, 10mm	07606-0010301	per unit
❸ Tee wrench, 12 mm	07606-0010401	per unit
❹ Tee handle cross head screwdriver No 2	07603-0050101	per unit
❹ Plastigauge 025 (green)	07303-0080100	per unit
❺ Tube of gasket paste, 100 g	TB 1207B	Engines GC(V)135/160/530 GXV520/530/GX100 GX(V)630/660/690
❻ Tube of gasket paste, 120 g	08CRA-HLG-120G	Engines GX22/31/GXH50/GXV50/GX360K1/GX640 GD1100/1250/GD321/411 GX25/GX35
❼ Open-end wrench	07725-0030000	
❽ Generator hour meter	08174-ZL8-010HE	All models
❾ AVR control	07KPJ-0010001	To be ordered with cables matching the generator

(Subject to stock availability)

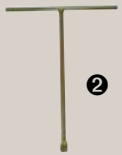

❷

❸

❹

❺

❻

❼

❽

❾

uni-power
ENGINES • TRANSMISSIONS • PARTS
TEL: 01371 875331 www.uni-power.co.uk

HONDA
The Power of Dreams

"As a responsible company, Honda undertakes to use all practical means to preserve the environment in all phases of its activity within the group."

Honda environmental declaration – 1992
http://corporate.honda.com/environment/

In its effort to continually improve the quality of its products, Honda reserves the right to alter the characteristics at any time without prior notice. For your safety and for optimum use of the products, we advise you to read the user manuals.

PEFC 10-31-1651 Certified PEFC pefc-france.org

This catalogue has been produced on PEFC paper, consisting for at least 70% of wood from forests managed in accordance with the recommendations of the national and regional PEFC entities.

GREEN PRINT 2012

HONDA
POWER EQUIPMENT

Honda Motor Europe Logistics NV
Langerbruggestraat 104
B-9000 Gent
Tel: +32 (0)9 250 12 11
Fax: +32 (0)9 250 12 32
www.hondamotoreuropelogistics.com

Connect with Honda Motor Europe Logistics NV
Follow Honda Motor Europe Logistics NV via Twitter
Join Honda Motor Europe Logistics NV's Facebook page

PR293-DAF-GREEN